Pioneer

Service Manual

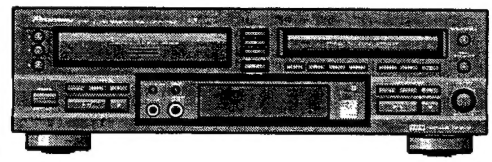

ORDER NO.
RRV2352

COMPACT DISC RECORDER / MULTI-CD CHANGER

PDR-W839

THIS MANUAL IS APPLICABLE TO THE FOLLOWING MODEL(S) AND TYPE(S).

Type	Model	Power Requirement	Remarks
	PDR-W839		
KUXJ/CA	○	AC120V	
WYXJ	○	AC220-240V	
WVXJ	○	AC220-240V	

[EXPLANATORY NOTE]

- After reparing the unit, make sure to return the operation condition to the shipping position. (for protection during packing)
  Refer to P.81 "Setting the initial condition for shippping".

FOR U.S. MODELS

NECESSARY INFORMATION FOR DHHS RULES MARKED ON THE REAR BASE AND ON THE TOP OF CD MECHANISM AS BELOW.

DANGER – LASER RADIATION WHEN OPEN. AVOID DIRECT EXPOSURE TO BEAM.

CONTENTS

1. SAFETY INFORMATION 2
2. EXPLODED VIEWS AND PARTS LIST 4
3. BLOCK DIAGRAM AND SCHEMATIC DIAGRAM 12
4. PCB CONNECTION DIAGRAM 44
5. PCB PARTS LIST 58
6. ADJUSTMENT 63
7. GENERAL INFORMATION 77
   7.1 DIAGNOSIS 77
      7.1.1 ERROR CODE 77
      7.1.2 SOLUTION OF 3CD TRAY MISMATCHING 78
      7.1.3 POWER ON SEQUENCE 79
      7.1.4 ERROR MESSAGE "CHECK TEMP" 82
      7.1.5 CD-R DISC MANUFACTURER CODE 82
      7.1.6 DISASSEMBLY 83
      7.1.7 DIAGNOSIS OF MAIN ASSY 87
      7.1.8 DIAGNOSIS OF CD-R CORE ASSY 87
   7.2 PARTS 88
      7.2.1 IC 88
      7.2.2 DISPLAY 102
8. PANEL FACILITIES AND SPECIFICATIONS 104

PIONEER CORPORATION 4-1, Meguro 1-chome, Meguro-ku, Tokyo 153-8654, Japan
PIONEER ELECTRONICS SERVICE, INC. P.O. Box 1760, Long Beach, CA 90801-1760, U.S.A.
PIONEER EUROPE NV Haven 1087, Keetberglaan 1, 9120 Melsele, Belgium
PIONEER ELECTRONICS ASIACENTRE PTE. LTD. 253 Alexandra Road, #04-01, Singapore 159936

©PIONEER CORPORATION 2000

T – ZZV AUG. 2000

1. SAFETY INFORMATION

This service manual is intended for qualified service technicians ; it is not meant for the casual do-it-yourselfer. Qualified technicians have the necessary test equipment and tools, and have been trained to properly and safely repair complex products such as those covered by this manual.
Improperly performed repairs can adversely affect the safety and reliability of the product and may void the warranty. If you are not qualified to perform the repair of this product properly and safely, you should not risk trying to do so and refer the repair to a qualified service technician.

WARNING
This product contains lead in solder and certain electrical parts contain chemicals which are known to the state of California to cause cancer, birth defects or other reproductive harm.

Health & Safety Code Section 25249.6 – Proposition 65

NOTICE
(FOR CANADIAN MODEL ONLY)
Fuse symbols (fast operating fuse) and/or (slow operating fuse) on PCB indicate that replacement parts must be of identical designation.

REMARQUE
(POUR MODÈLE CANADIEN SEULEMENT)
Les symboles de fusible (fusible de type rapide) et/ou (fusible de type lent) sur CCI indiquent que les pièces de remplacement doivent avoir la même désignation.

(FOR USA MODEL ONLY)

1. SAFETY PRECAUTIONS

The following check should be performed for the continued protection of the customer and service technician.

LEAKAGE CURRENT CHECK

Measure leakage current to a known earth ground (water pipe, conduit, etc.) by connecting a leakage current tester such as Simpson Model 229-2 or equivalent between the earth ground and all exposed metal parts of the appliance (input/output terminals, screwheads, metal overlays, control shaft, etc.). Plug the AC line cord of the appliance directly into a 120V AC 60Hz outlet and turn the AC power switch on. Any current measured must not exceed 0.5mA.

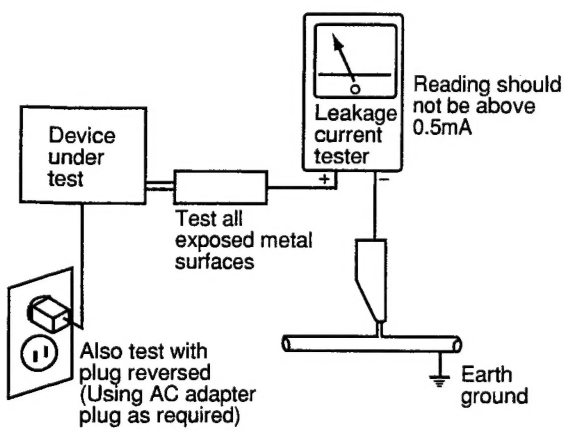

AC Leakage Test

ANY MEASUREMENTS NOT WITHIN THE LIMITS OUTLINED ABOVE ARE INDICATIVE OF A POTENTIAL SHOCK HAZARD AND MUST BE CORRECTED BEFORE RETURNING THE APPLIANCE TO THE CUSTOMER.

2. PRODUCT SAFETY NOTICE

Many electrical and mechanical parts in the appliance have special safety related characteristics. These are often not evident from visual inspection nor the protection afforded by them necessarily can be obtained by using replacement components rated for voltage, wattage, etc. Replacement parts which have these special safety characteristics are identified in this Service Manual.

Electrical components having such features are identified by marking with a ⚠ on the schematics and on the parts list in this Service Manual.
The use of a substitute replacement component which does not have the same safety characteristics as the PIONEER recommended replacement one, shown in the parts list in this Service Manual, may create shock, fire, or other hazards.

Product Safety is continuously under review and new instructions are issued from time to time. For the latest information, always consult the current PIONEER Service Manual. A subscription to, or additional copies of, PIONEER Service Manual may be obtained at a nominal charge from PIONEER.

CD RECORDER

IMPORTANT

THIS PIONEER APPARATUS CONTAINS LASER OF CLASS IIIb.
SERVICING OPERATION OF THE APPARATUS SHOULD BE DONE BY A SPECIALLY INSTRUTED PERSON.

LASER DIODE CHARACTERISTICS

MAXIMUM OUTPUT POWER: 23 mW
WAVELENGTH: 778 – 787 nm

CD PLAYER

IMPORTANT

THIS PIONEER APPARATUS CONTAINS LASER OF CLASS 1.
SERVICING OPERATION OF THE APPARATUS SHOULD BE DONE BY A SPECIALLY INSTRUCTED PERSON.

LASER DIODE CHARACTERISTICS

MAXIMUM OUTPUT POWER: 5 mW
WAVELENGTH: 760 - 800 nm

LABEL CHECK

WYXJ Type

VARO!
Avattaessa ja suojalukitus ohitettaessa olet alttiina näkymättömälle lasersäteilylle. Älä katso säteeseen.
VARNING!
Osynlig laserstrålning när denna del är öppnad och spärren är urkopplad. Betrakta ej strålen.
PRW1233

WVXJ Type

CAUTION
INVISIBLE LASER RADIATION WHEN OPEN, AVOID EXPOSURE TO BEAM
PRW1018

WYXJ Type

ADVARSEL
USYNLIG LASERSTRÅLING VED ÅBNING NÅR SIKKERHED SAFBRYDERE ER UDE AF FUNKTION.
UNDGÅ UDSÆTTELSE FOR STRÅLING
VORSICHT!
UNSICHTBARE LASER-STRAHLUNG TRITT AUS, WENN DECKEL (ODER KLAPPE) GEÖFFNET IST! NICHT DEM STRAHL AUSSETZEN!
VRW1094

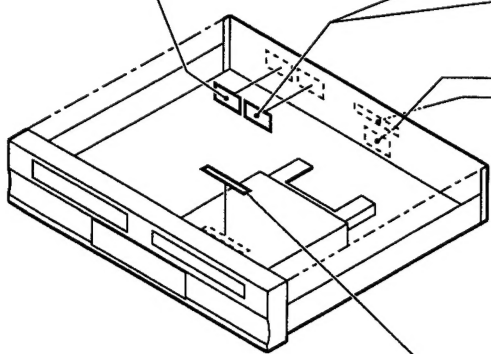

WYXJ and WVXJ Types

CLASS 1
LASER PRODUCT

Printed on Rear Panel

KUXJ/CA Type

DANGER — LASER RADIATION WHEN OPEN.
AVOID DIRECT EXPOSURE TO BEAM.

Printed on Rear Panel

DANGER — LASER RADIATION WHEN OPEN.
AVOID DIRECT EXPOSURE TO BEAM. PRW1516-A

CD RECORDER

Additional Laser Caution

1. Laser Interlock Mechanism
   The position of the switch (S101) on the LOAB Assy for detecting loading state is detected by the system microprocessor, and the design prevents laser diode oscillation when the switch (S101) is not on TRAY terminal side (TRAY signal is OFF or high level.). Thus, the interlock will no longer function if the switch (S101) is deliberately set to TRAY terminal side (low level).
   The interlock also does not function in the test mode *.
   Laser diode oscillation will continue, if pin 1 of CN101 on the CD-R CORE ASSY is connected to low level.

2. When the cover is opened with the servo mechanism block removed and turned over, close viewing of the objective lens with the naked eye will cause exposure to a Class 3 laser beam.

* Refer to page 64.

CD PLAYER

Additional Laser Caution

1. Laser Interlock Mechanism
   The position of the switch (S101) on the SELECT UNIT for detecting clamping state is detected by the system microprocessor, and the design prevents laser diode oscillation when the switch (S101) is not on $\overline{\text{CLMP}}$ terminal side ($\overline{\text{CLMP}}$ signal is OFF or high level.). Thus, the interlock will no longer function if the switch (S101) is deliberately set to $\overline{\text{CLMP}}$ terminal side (low level).
   The interlock also does not function in the test mode *.
   Laser diode oscillation will continue, if pin 9 of TA2150FN (IC1101) on the 3CD ASSY is connected to GND, or pin 26 is connected to low level (ON), or else the terminals of Q1101 are shorted to each other (fault condition).

2. When the cover is opened with the servo mechanism block removed and turned over, close viewing of the objective lens with the naked eye will cause exposure to a Class 1 laser beam.

* Refer to page 63.

2. EXPLODED VIEWS AND PARTS LIST

NOTES: ● *Parts marked by "NSP" are generally unavailable because they are not in our Master Spare Parts List.*
● *The ⚠ mark found on some component parts indicates the importance of the safety factor of the part. Therefore, when replacing, be sure to use parts of identical designation.*
● *Screws adjacent to ▼ mark on the product are used for disassembly.*

2.1 PACKING

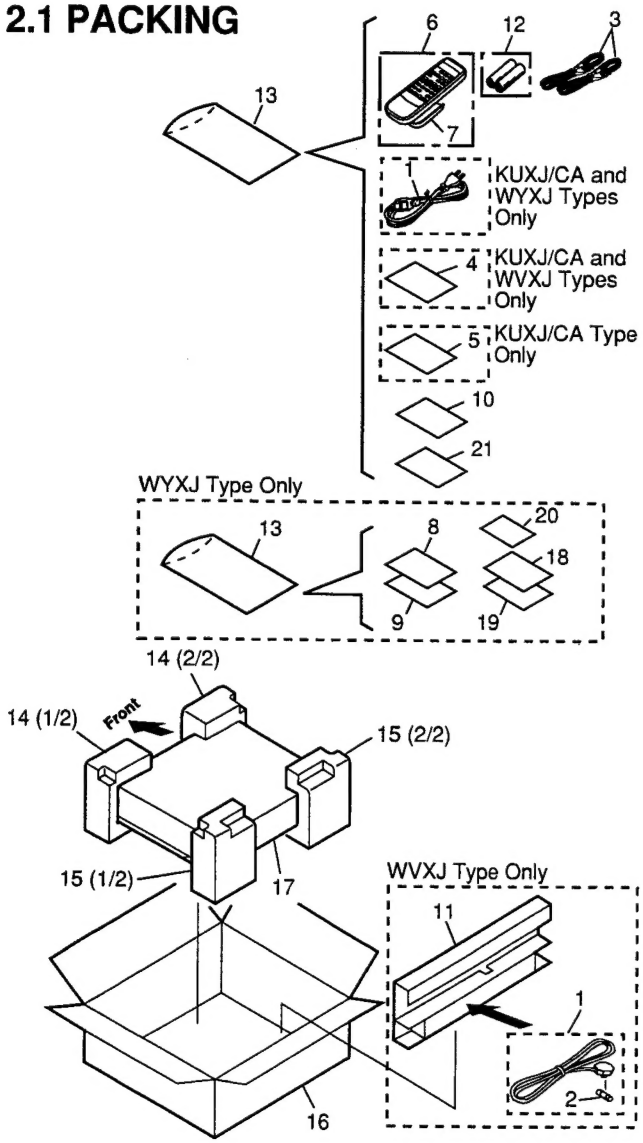

(1) PACKING PARTS LIST

Mark	No.	Description	Part No.
⚠	1	AC Power Cord	See Contrast table (2)
⚠	2	Fuse (T5A)	See Contrast table (2)
	3	Stereo Audio Cord (1m)	RDE1036
	4	Operating Instructions (English)	See Contrast table (2)
	5	Sub Manual (English)	See Contrast table (2)
	6	Remote Control Unit	PWW1171
	7	Battery Cover	RZN1156
	8	Operating Instructions (German/Italian)	See Contrast table (2)
	9	Operating Instructions (Dutch/Swedish)	See Contrast table (2)
NSP	10	Warranty Card	See Contrast table (2)
	11	V Spacer	See Contrast table (2)
NSP	12	Dry Cell Battery (R6P, AA)	VEM-013
	13	Polyethylene Bag (230 × 340 × 0.03)	Z21-038
	14	Protector F	PHA1347
	15	Protector R	PHA1348
	16	Packing Case	See Contrast table (2)
	17	Mirror Mat Sheet (750 × 600 × 0.5)	Z23-007
	18	Operating Instructions (Spanish/Danish)	See Contrast table (2)
	19	Operating Instructions (English/French)	See Contrast table (2)
	20	Keypad Stickers	See Contrast table (2)
	21	Caution	See Contrast table (2)

(2) CONTRAST TABLE

PDR-W839/KUXJ/CA, WYXJ and WVXJ Types are constructed the same except for the following :

Mark	No.	Symbol and Description	Part No.			Remarks
			KUXJ/CA Type	WYXJ Type	WVXJ Type	
⚠	1	AC Power Cord	ADG7022	ADG1154	ADG1156	
⚠	2	Fuse (T5A)	Not used	Not used	AEK1046	
	4	Operating Instructions (English)	PRB1307	Not used	PRB1307	
	5	Sub Manual (English)	PRB1308	Not used	Not used	
	8	Operating Instructions (German/Italian)	Not used	PRD1061	Not used	
	9	Operating Instructions (Dutch/Swedish)	Not used	PRD1062	Not used	
NSP	10	Warranty Card	ARY7045	ARY7022	ARY7022	
	11	V Spacer	Not used	Not used	PHC1094	
	16	Packing Case	PHG2422	PHG2423	PHG2424	
	18	Operating Instructions (Spanish/Portuguese)	Not used	PRD1063	Not used	
	19	Operating Instructions (English/French)	Not used	PRE1293	Not used	
	20	Keypad Stickers	Not used	PRW1581	Not used	
	21	Caution	PRM1077	PRM1075	PRM1077	

2.2 EXTERIOR SECTION

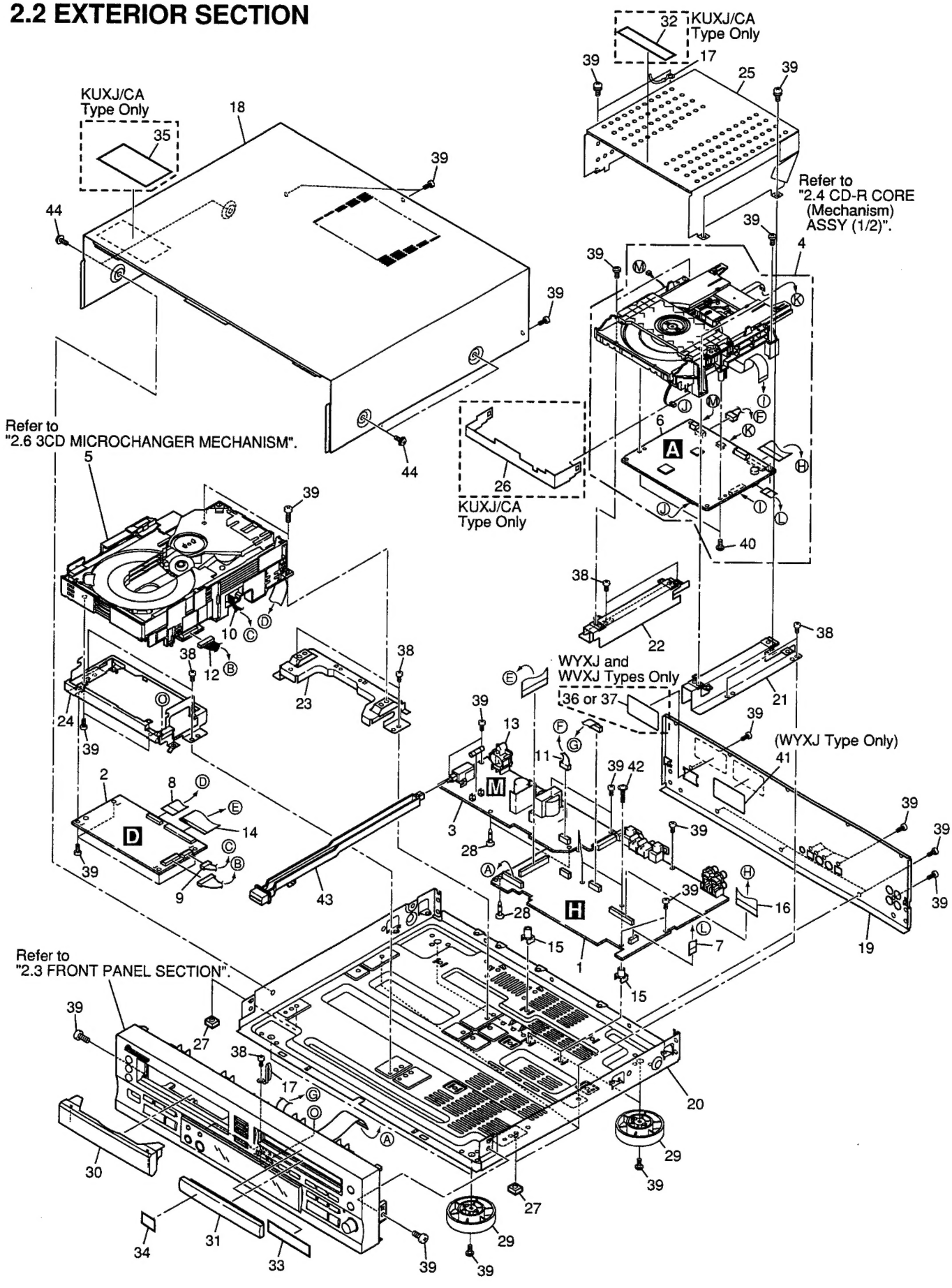

(1) EXTERIOR SECTION PARTS LIST

Mark	No.	Description	Part No.
	1	MAIN Assy	See Contrast table (2)
	2	3CD CORE Assy	PWM2334
⚠	3	POWER SUPPLY UNIT	PWR1029
NSP	4	CD-R CORE (Mechanism) Assy	PXA1631
NSP	5	3CD Microchanger Mechanism	AXA7096
	6	CD-R CORE (PCB) Assy	PYY1286
	7	9P Flat Flexible Cable/30V	PDD1218
	8	16P Flat Flexible Cable/30V	PDD1223
	9	Connector Assy (7P)	PDE1309
	10	Connector Assy (6P)	PDE1310
	11	Connector Assy	PG06KK-F20
	12	Connector Assy	PG11KK-E07
⚠	13	Power Socket	See Contrast table (2)
	14	33P Flat Flexible Cable/30V	PDD1215
	15	PCB Mold	AMR2533
	16	25P Flat Flexible Cable/30V	PDD1217
NSP	17	Cord Stopper	DNF1128
	18	Bonnet Case BR	PYY1283
	19	Rear Base	See Contrast table (2)
NSP	20	Under Base	PNA2561
NSP	21	Mechanism Base 839RR	PNB1625
NSP	22	Mechanism Base 839RL	PNB1626
NSP	23	3CD Mechanism Base R	PNB1627
NSP	24	3CD Mechanism Base F	PNB1628
	25	Shield Case	PNB1630
	26	Shield Plate	See Contrast table (2)
	27	Disc Guard	PNM1245
NSP	28	PCB Holder	PNW2029
	29	Insulator	PNW2766
	30	Tray Panel C	PNW2936
	31	Tray Panel B R	PNW2981
NSP	32	Laser Caution Label	See Contrast table (2)
	33	Getter W739 KU	PRW1542
	34	CDR Getter	AAX7837
	35	Disc Caution Label	See Contrast table (2)
	36	Caution Label	See Contrast table (2)
	37	Caution Label HE	See Contrast table (2)
	38	Screw	ABA1207
	39	Screw	BBZ30P080FCC
	40	Screw	PPZ30P080FMC
	41	Caution Label	See Contrast table (2)
	42	Screw	IBZ30P180FMC
	43	Power Button B	PAC2009
	44	Screw	FBT40P080FZK

(2) CONTRAST TABLE

PDR-W839/KUXJ/CA, WYXJ and WVXJ Types are constructed the same except for the following :

Mark	No.	Symbol and Description	Part No.			Remarks
			KUXJ/CA Type	WYXJ Type	WVXJ Type	
	1	MAIN Assy	PWM2325	PWM2326	PWM2326	
⚠	13	Power Socket	AKP7032	Not used	Not used	
⚠	13	1P AC Inlet	Not used	BKP1046	BKP1046	
	19	Rear Base 839KU	PNA2554	Not used	Not used	
	19	Rear Base 839WY	Not used	PNA2553	PNA2553	
	26	Shield Plate	PNB1631	Not used	Not used	
NSP	32	Laser Caution Label	PRW1516	Not used	Not used	
	35	Disc Caution Label	PRW1551	Not used	Not used	
	36	Caution Label	Not used	Not used	PRW1018	
	37	Caution Label HE	Not used	PRW1233	Not used	
	41	Caution Label	Not used	VRW1094	Not used	

2.3 FRONT PANEL SECTION

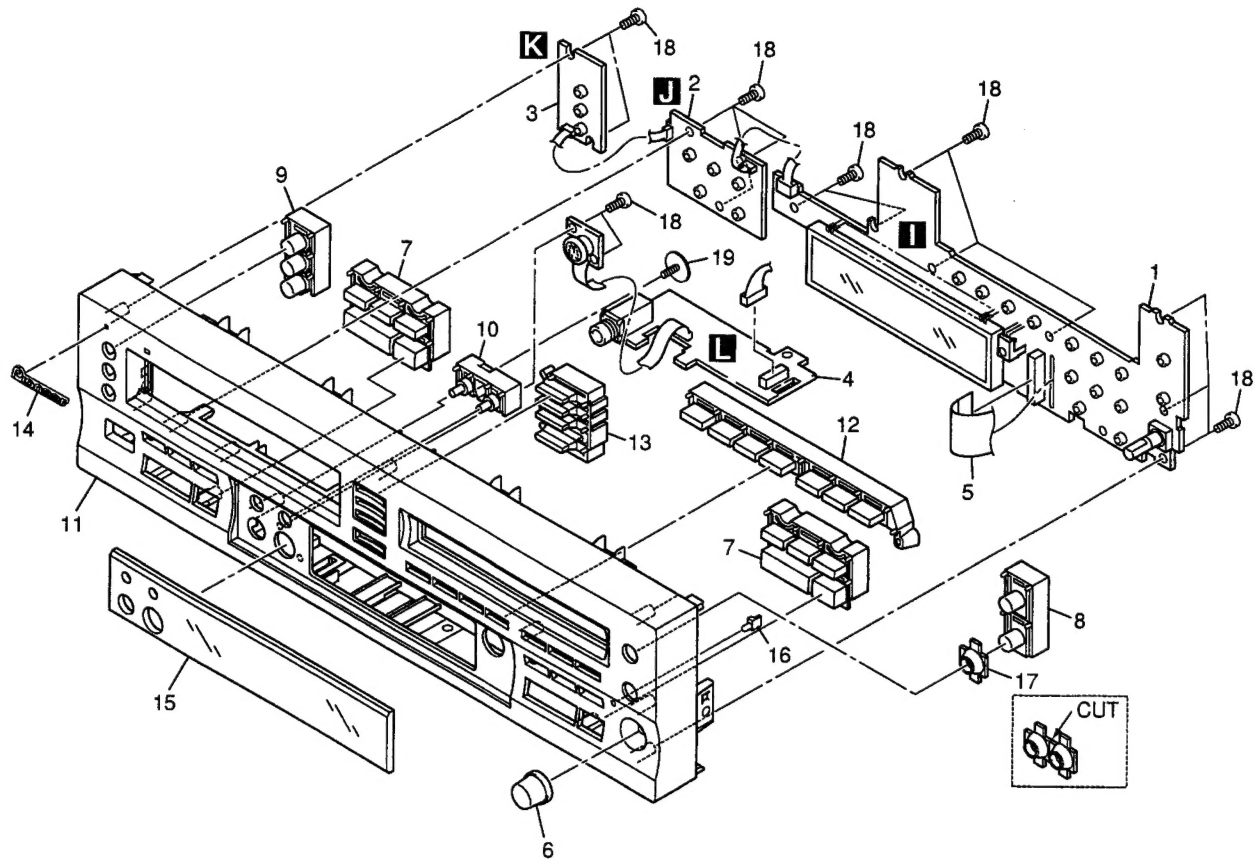

(1) FRONT PANEL SECTION PARTS LIST

Mark	No.	Description	Part No.
	1	OPERATING 1 Assy	See Contrast table (2)
	2	OPERATING 2 Assy	See Contrast table (2)
	3	OPERATING 3 Assy	See Contrast table (2)
	4	HEADPHONE Assy	See Contrast table (2)
	5	22P Flat Flexible Cable/60V	PDD1214
	6	JOG Knob D508	PAC1939
	7	Play Button	PAC1979
	8	Operation Button	PAC1980
	9	O/C Button	PAC1982
	10	Random Button	PAC1996
	11	Front Panel	See Contrast table (2)
	12	Mode Button B	PAC2011
	13	Self-Lighted Button	PAC2023
	14	Pioneer Badge	PAM1776
	15	Display Panel	See Contrast table (2)
	16	LED Lens	PNW2745
	17	REC Ring	PNW2795
	18	Screw	PPZ30P080FZK
	19	Screw	ABA7009

(2) CONTRAST TABLE

PDR-W839/KUXJ/CA, WYXJ and WVXJ Types are constructed the same except for the following :

Mark	No.	Symbol and Description	Part No.			Remarks
			KUXJ/CA Type	WYXJ Type	WVXJ Type	
	1	OPERATING 1 Assy	PWZ4133	PWZ4134	PWZ4134	
	2	OPERATING 2 Assy	PWZ4141	PWZ4142	PWZ4142	
	3	OPERATING 3 Assy	PWZ4149	PWZ4150	PWZ4150	
	4	HEADPHONE Assy	PWZ4157	PWZ4158	PWZ4158	
	11	Front Panel 839KU	PNW2983	Not used	Not used	
	11	Front Panel 839WY	Not used	PNW2979	PNW2979	
	15	Display Panel OR	PAM1828	Not used	Not used	
	15	Display Panel BL EUR	Not used	PAM1832	PAM1832	

2.4 CD-R CORE (Mechanism) ASSY (1/2)

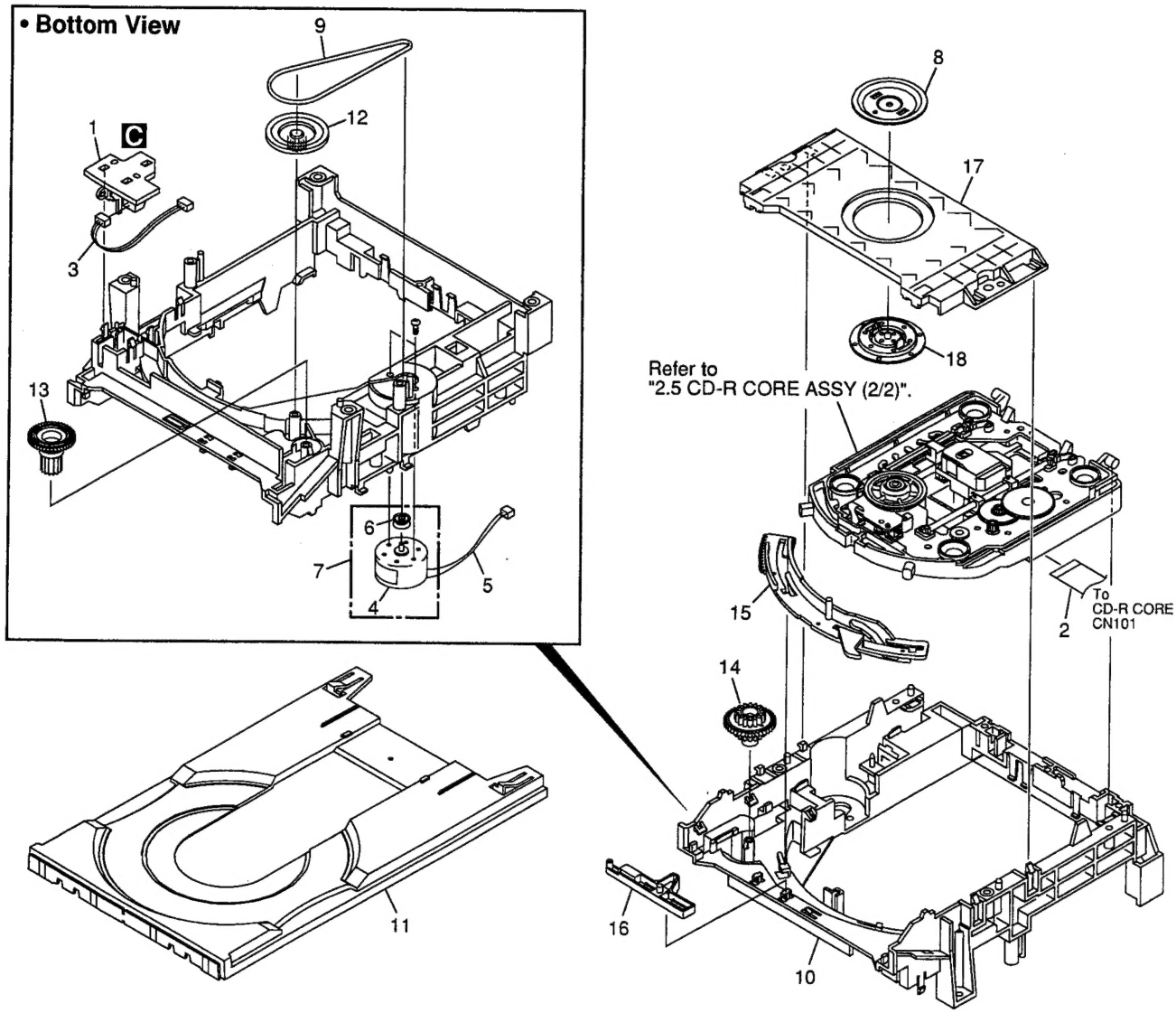

• CD-R CORE (Mechanism) ASSY(1/2) PARTS LIST

Mark	No.	Description	Part No.
NSP	1	LOAB Assy	VWG2171
	2	32P Flexible Cable / 30V	PDD1222
	3	Connector Assy	PG03KK-E07
	4	DC Motor (LOADING)	PXM1027
	5	Connector Assy 2P	VKP2253
	6	Motor Pulley	PNW1634
	7	Loading Motor Assy	VXX2505
	8	Clamper Plate	VNE2162
	9	Rubber Belt	VEB1315
	10	Loading Base S	PNW2968
	11	Tray	VNL1858
	12	Gear Pulley	VNL1866
	13	Loading Gear	VNL1860
	14	Drive Gear	VNL1861
	15	Drive Cam	VNL1862
	16	Lock Plate	VNL1820
	17	Bridge	VNL1859
	18	Clamper	VNL1738

2.5 CD-R CORE (Mechanism) ASSY (2/2)

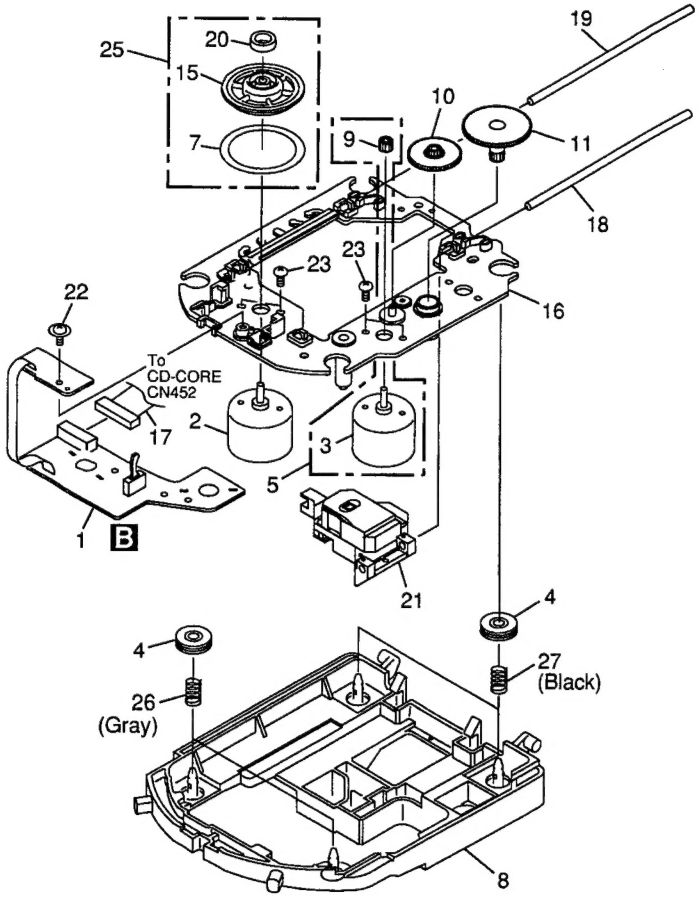

• CD-R CORE (Mechanism) ASSY(2/2) PARTS LIST

Mark	No.	Description	Part No.
NSP	1	MECHA PCB Assy	PWX1625
	2	DC Motor (SPINDLE)	PXM1044
NSP	3	DC Motor (CARRIAGE)	PXM1045
	4	Float Rubber	PEB1308
	5	Carriage Motor Assy	PEA1353
NSP	6	Rack Spring	DBH1285
NSP	7	Reflection Sheet	PNM1325
	8	Float Base	PNW2964
	9	Pinion Gear	PNW2994
	10	Gear A	PNW2855
	11	Gear B	PNW2856
	12	Gear C	PNW2969
	13	Rack	PNW2965
	14	Rack Stopper	PNW2966
NSP	15	Disc Table	PNW2860
	16	Carriage Base	PNW2967
	17	Flexible Cable (08P)	VDA1822
	18	Guide Bar	VLL1504
	19	Sub Guide Bar	VLL1505
NSP	20	Magnet	VYM1024
	21	CD-R Pickup	PEA1355
	22	Screw	Z39-018
	23	Screw	PMZ20P030FMC
	24	Screw	JGZ17P030FMC
	25	Disc Table Assy	PEA1349
	26	Floating Spring (Gray)	PBH1232
	27	Floating Sprin B (Black)	PBH1234

• Bottom View

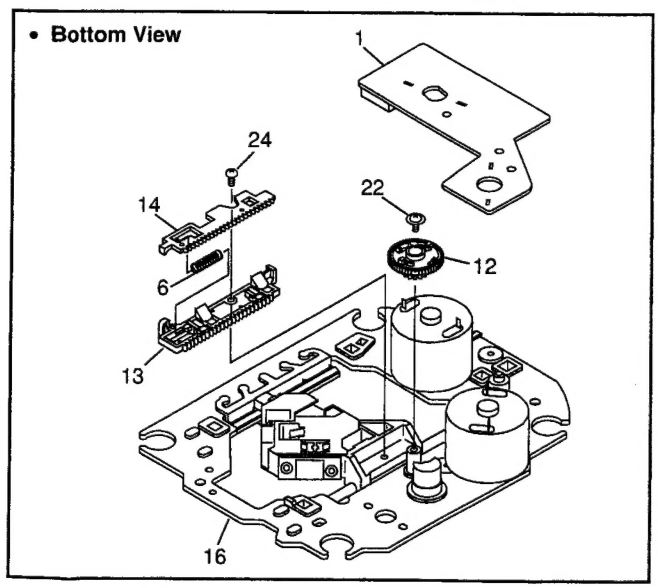

• How to Install the Disc Table

1 Use nippers or other tool to cut the two sections marked Ⓐ in figure 1.

2 While supporting the spindle motor shaft with the stopper, put spacer on top of the carriage base, and stick the disc table on top (takes about 9kg pressure). Take off the spacer.

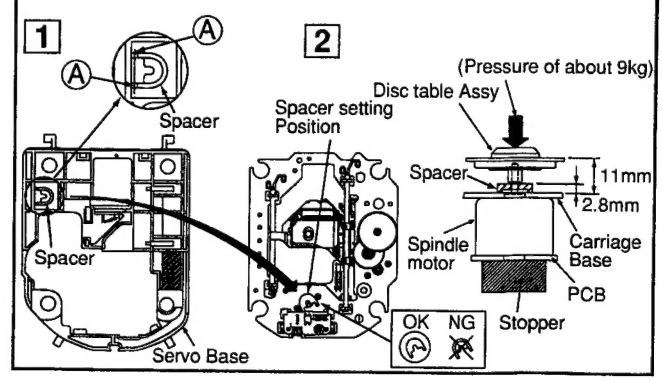

2.6 3CD MICROCHANGER MECHANISM

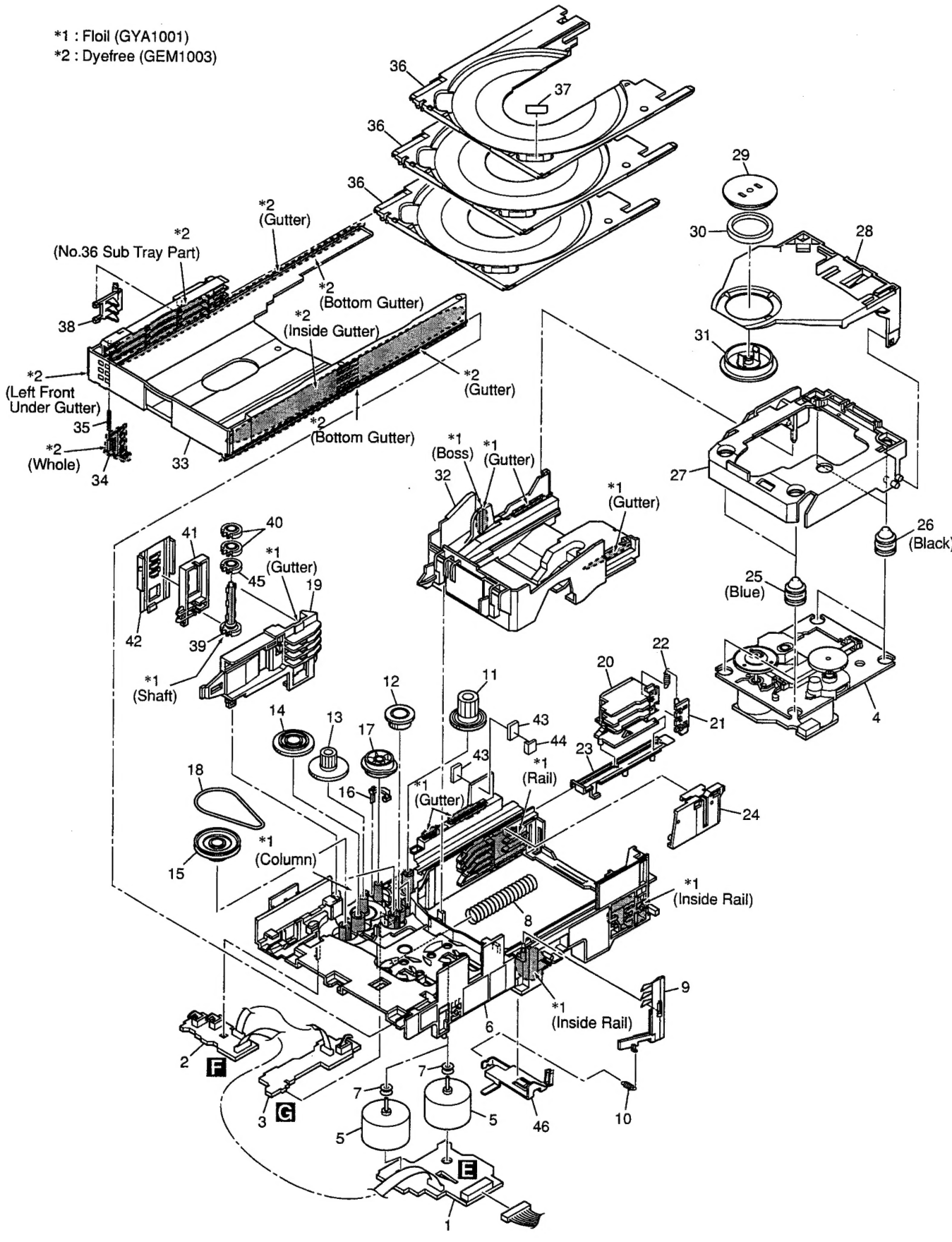

• 3CD MICROCHANGER MECHANISM PARTS LIST

Mark	No.	Description	Part No.
	1	MOTOR Unit	AWU7431
	2	LOADING Unit	AWU7432
	3	SELECT Unit	AWU7433
	4	PICKUP Unit	KSM213CCM
	5	Carriage Motor	VXM1033
	6	Mechanism Base	ANW7129
	7	Motor Pulley	PNW1634
	8	Lift Spring	ABH7173
	9	Home Lever	ANW7153
	10	HL Spring 2	ABH7182
	11	Extended Gear A	ANW7138
	12	Gear A	ANW7136
	13	Extended Gear B	ANW7139
	14	Gear B	ANW7137
	15	Gear Pully	ANW7135
	16	Select Lever	ANW7143
	17	EV Cam gear	ANW7140
	18	Belt	AEB7159
	19	Elevator Base	ANW7132
	20	Tray Guide	ANW7150
	21	TG Stopper	ANW7151
	22	TG Spring	ABH7175
	23	Cam Plate	ANW7147
	24	Lock Lever	ANW7148
	25	Float Rubber A (Blue)	AEB7063
	26	Float Rubber B (Black)	AEB7066
	27	Float Base	ANW7130
	28	Clamper Holder	ANW7152
	29	Yoke	ANG7257
	30	Clamper Magnet	AMF7001
	31	Clamper SO	XNW3007
	32	Swing Base	ANW7131
	33	Main Tray	ANW7133
	34	Lock Plate	ANW7144
	35	Lock Plate Spring	ABH7174
	36	SUB Tray	ANW7134
	37	Tray Label	ARW7070
	38	Stopper Arm	ANW7145
	39	Gear Shaft	ANW7142
	40	Loading Gear	ANW7141
	41	Elevator	ANW7207
	42	Elevator Cover	ANW7206
NSP	43	MB Spacer	AEC7259
NSP	44	MB3 Spacer	AEC7263
	45	Loading Gear 2	ANW7195
	46	Spring Support	ANG7342

PDR-W839

3. BLOCK DIAGRAM AND SCHEMATIC DIAGRAM

3.1 BLOCK DIAGRAM

E F G AWU7431
AWU7432
AWU7433

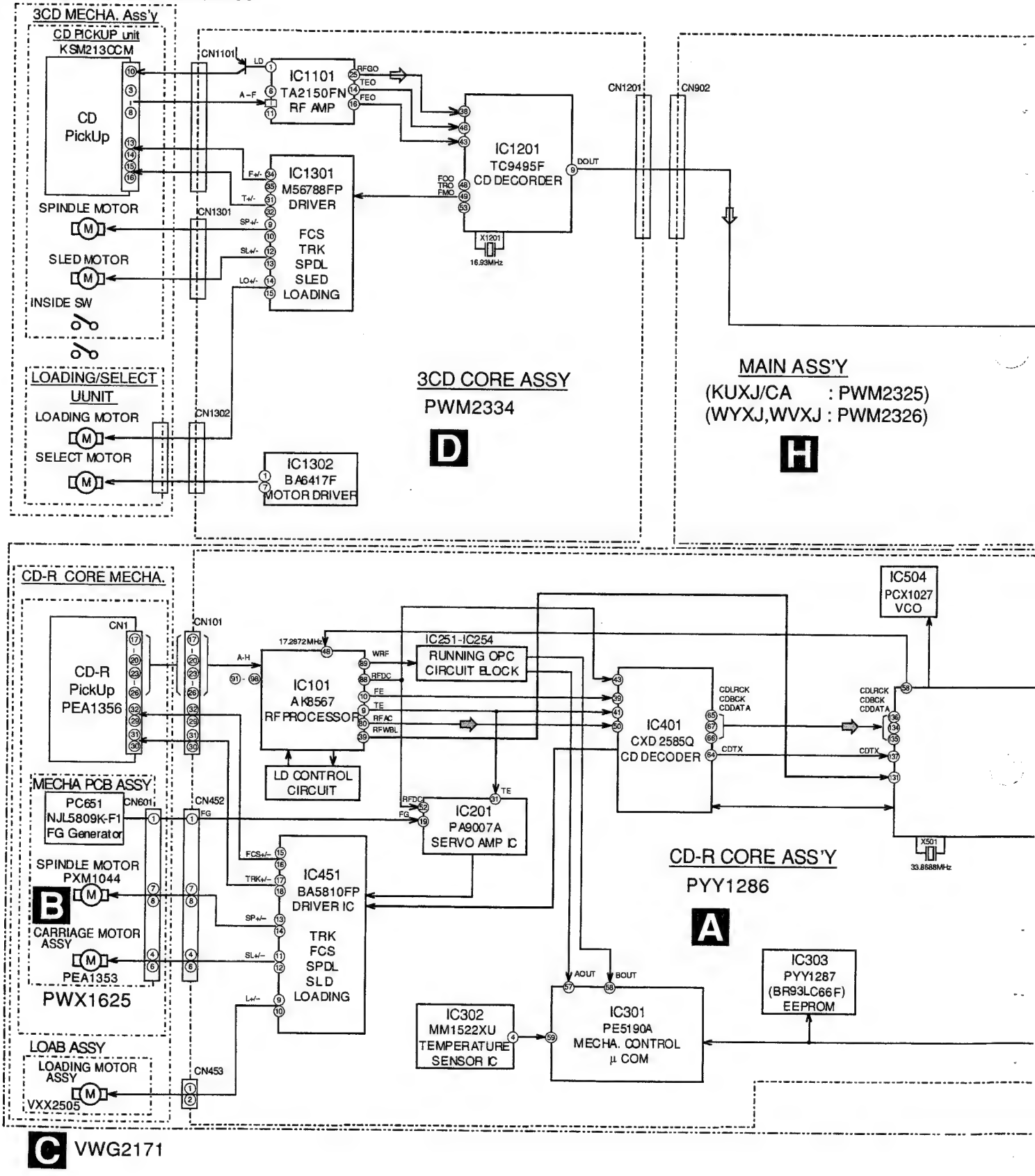

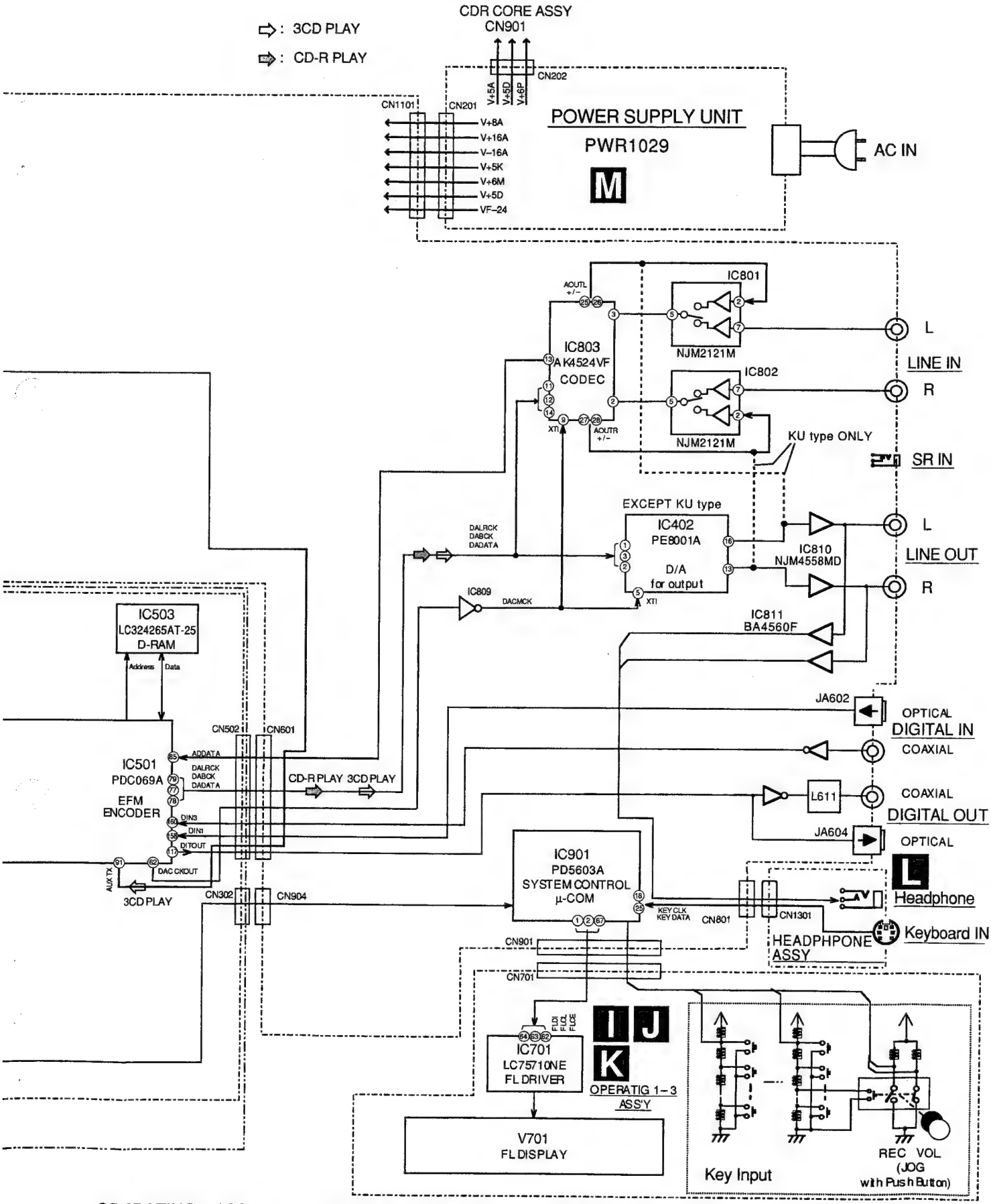

OPERATING 1 ASSY		OPERATING 2 ASSY		OPERATING 3 ASSY		HEADPHONE ASSY	
(KUXJ/CA	: PWZ4133)	(KUXJ/CA	: PWZ4141)	(KUXJ/CA	: PWZ4149)	(KUXJ/CA	: PWZ4157)
(WYXJ,WVXJ	: PWZ4134)	(WYXJ,WVXJ	: PWZ4142)	(WYXJ,WVXJ	: PWZ4150)	(WYXJ,WVXJ	: PWZ4158)

3.2 OVERALL WIRING DIAGRAM

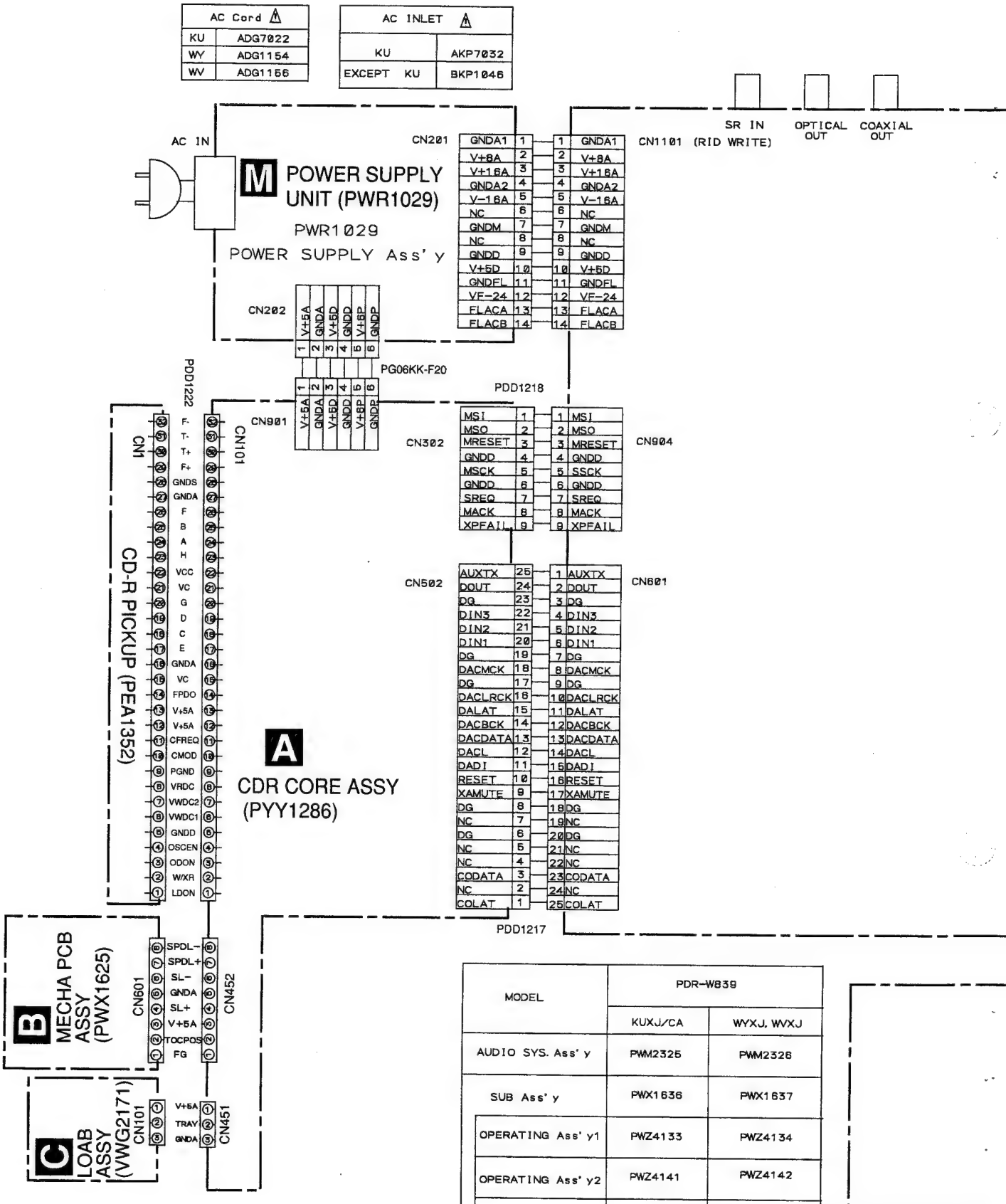

MODEL	PDR-W839	
	KUXJ/CA	WYXJ, WVXJ
AUDIO SYS. Ass'y	PWM2325	PWM2326
SUB Ass'y	PWX1636	PWX1637
OPERATING Ass'y1	PWZ4133	PWZ4134
OPERATING Ass'y2	PWZ4141	PWZ4142
OPERATING Ass'y3	PWZ4149	PWZ4150
H.P Ass'y	PWZ4157	PWZ4158

Note : When ordering service parts, be sure to refer to "EXPLODED VIEWS and PARTS LIST" or "PCB PARTS LIST".

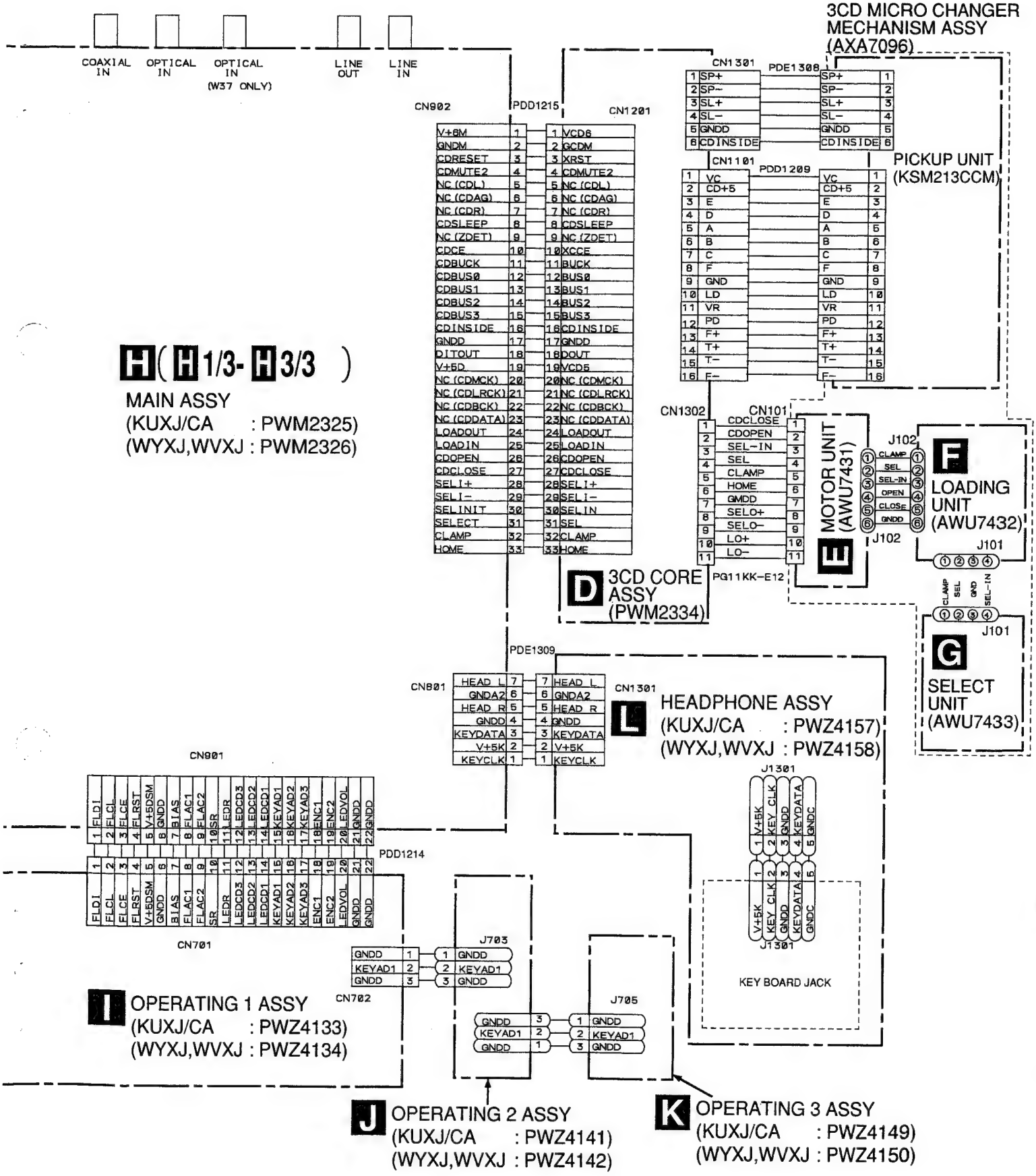

3.3 CD-R CORE ASSY(1/5)

A 1/5
CD-R CORE ASSY
(PYY1286)

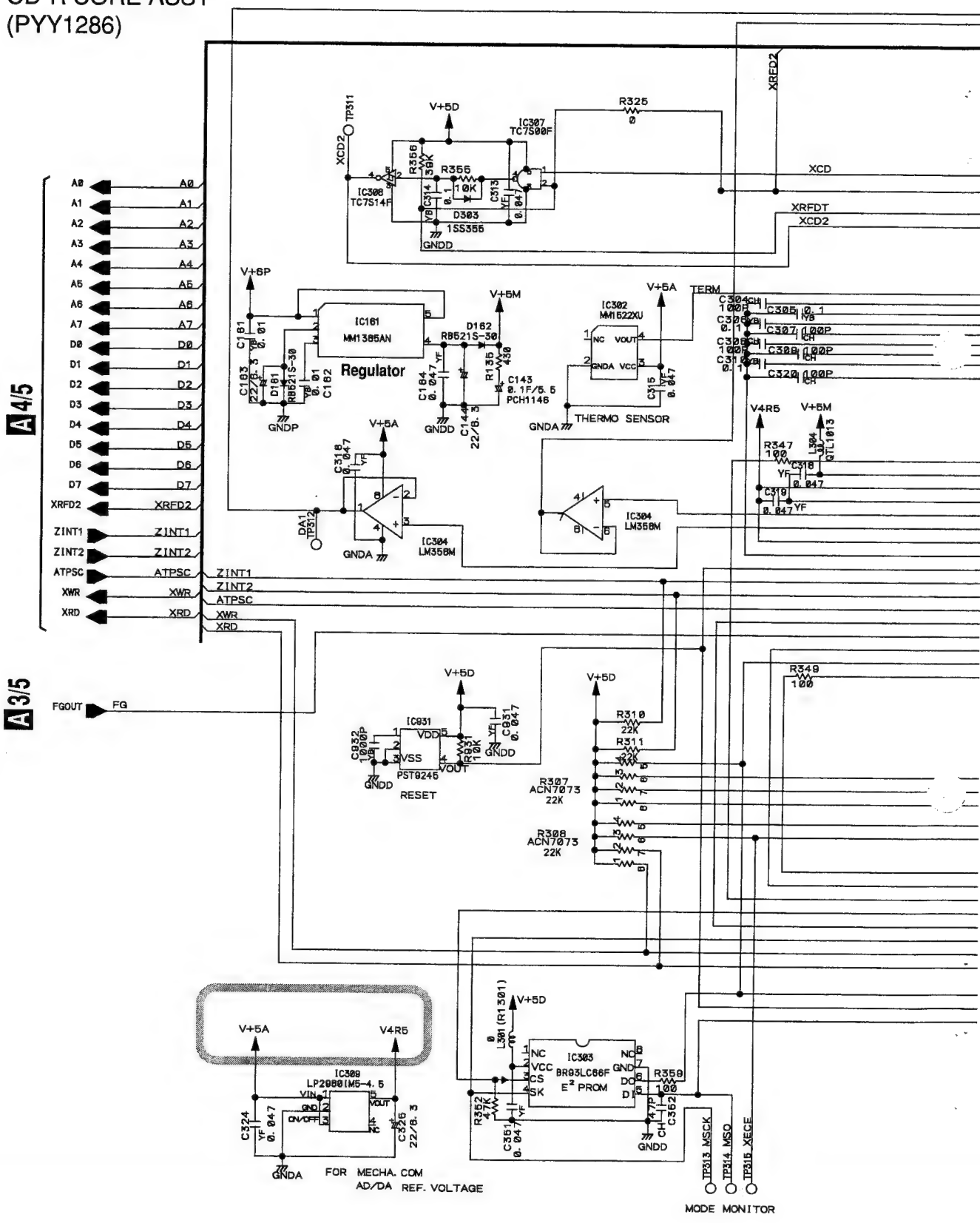

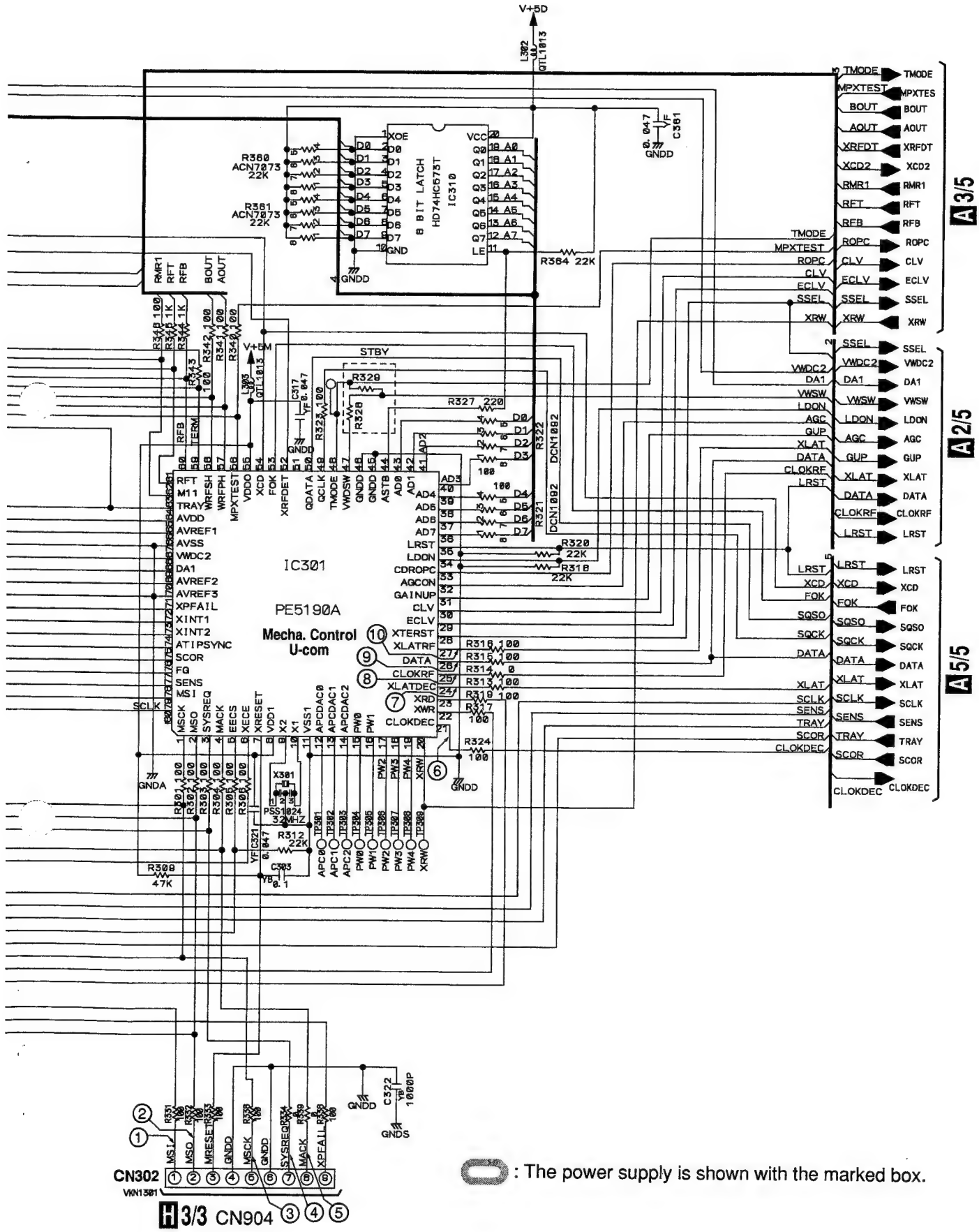

: The power supply is shown with the marked box.

3.4 CD-R CORE ASSY(2/5)

A 2/5
CD-R CORE ASSY
(PYY1286)

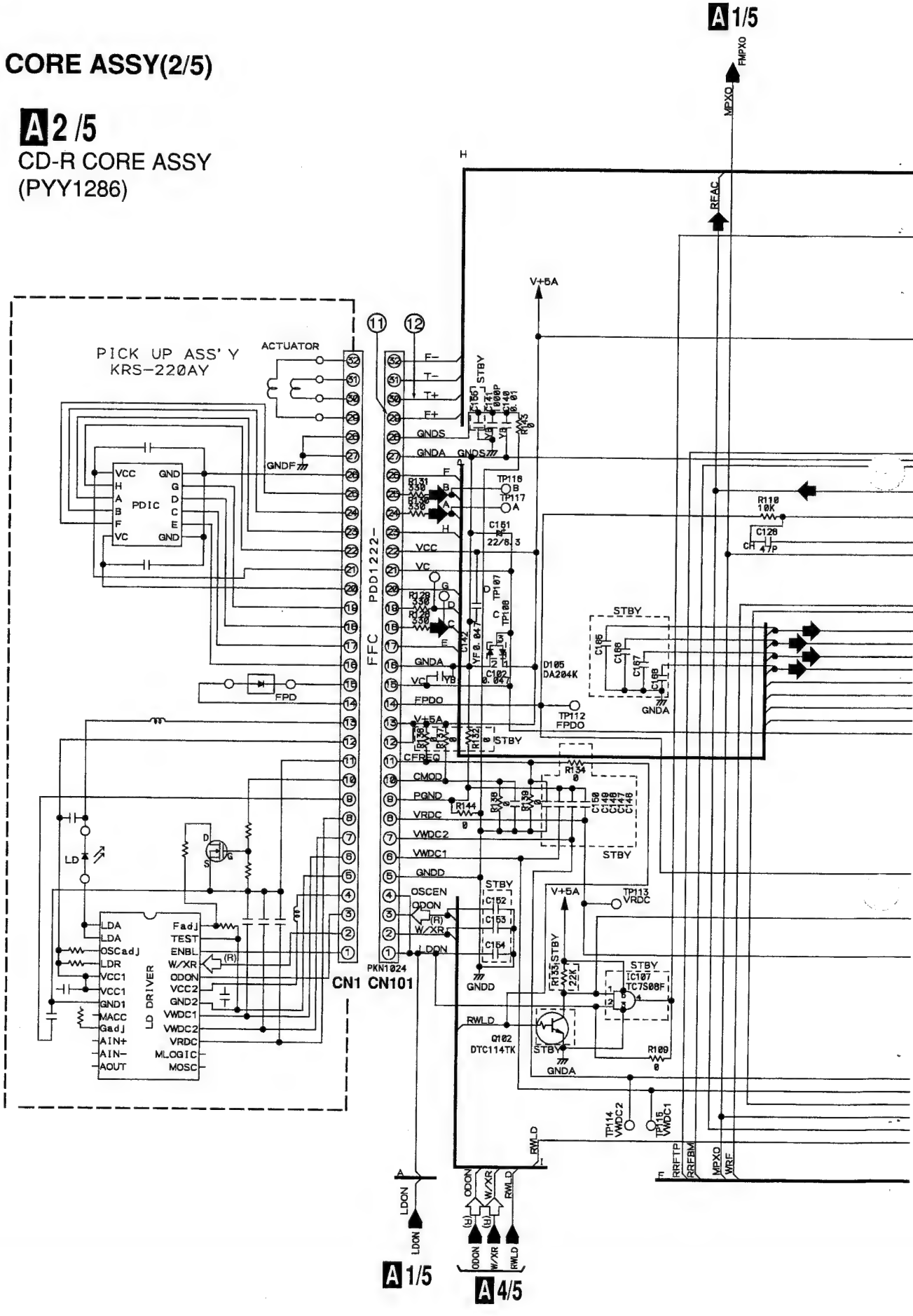

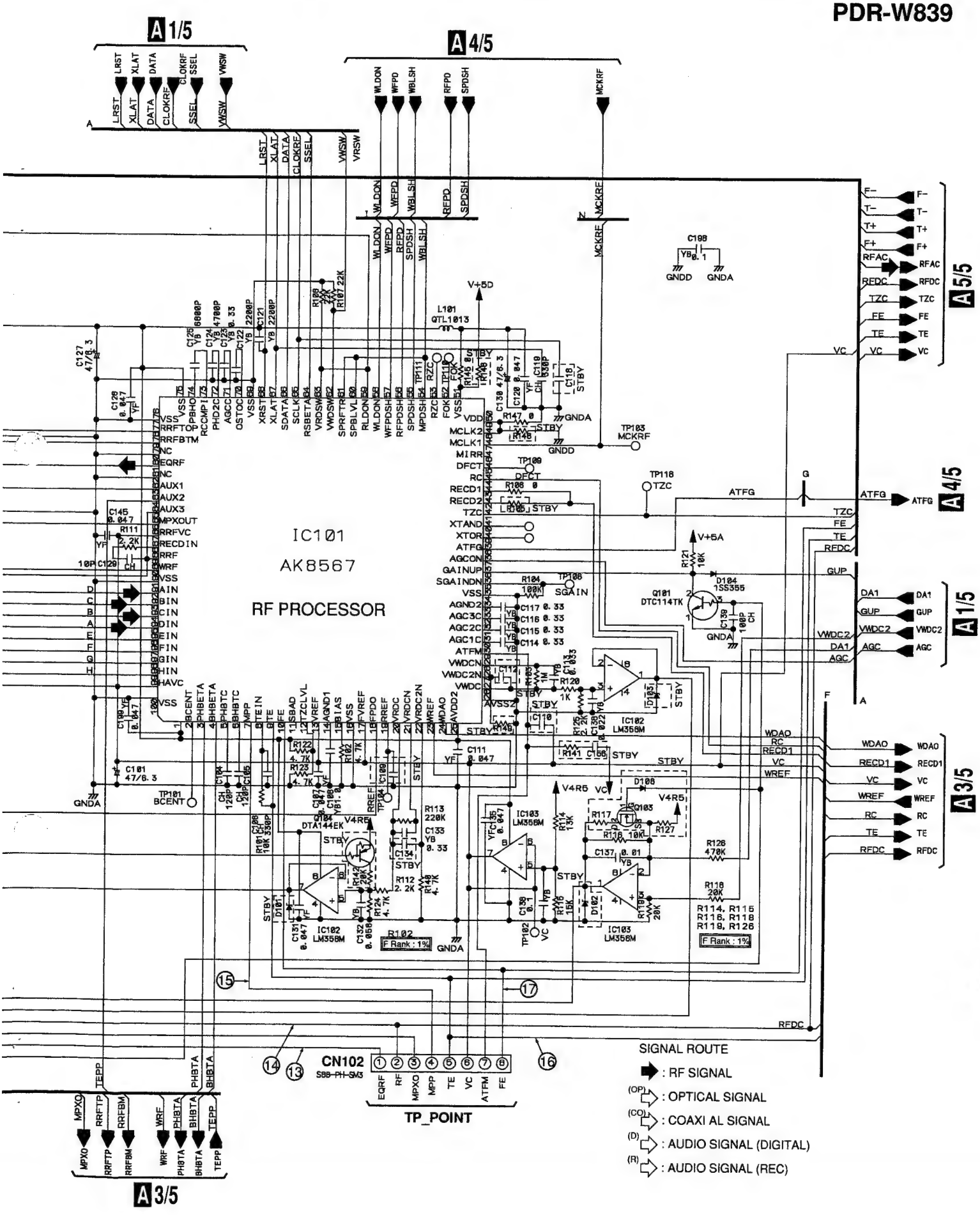
IC101
AK8567
RF PROCESSOR
A 1/5
A 4/5
A 5/5
A 3/5
A 2/5
CN102
S8B-PH-SM3
TP_POINT
SIGNAL ROUTE
: RF SIGNAL
: OPTICAL SIGNAL
: COAXI AL SIGNAL
: AUDIO SIGNAL (DIGITAL)
: AUDIO SIGNAL (REC)
F Rank : 1%

3.5 CD-R CORE ASSY(3/5)

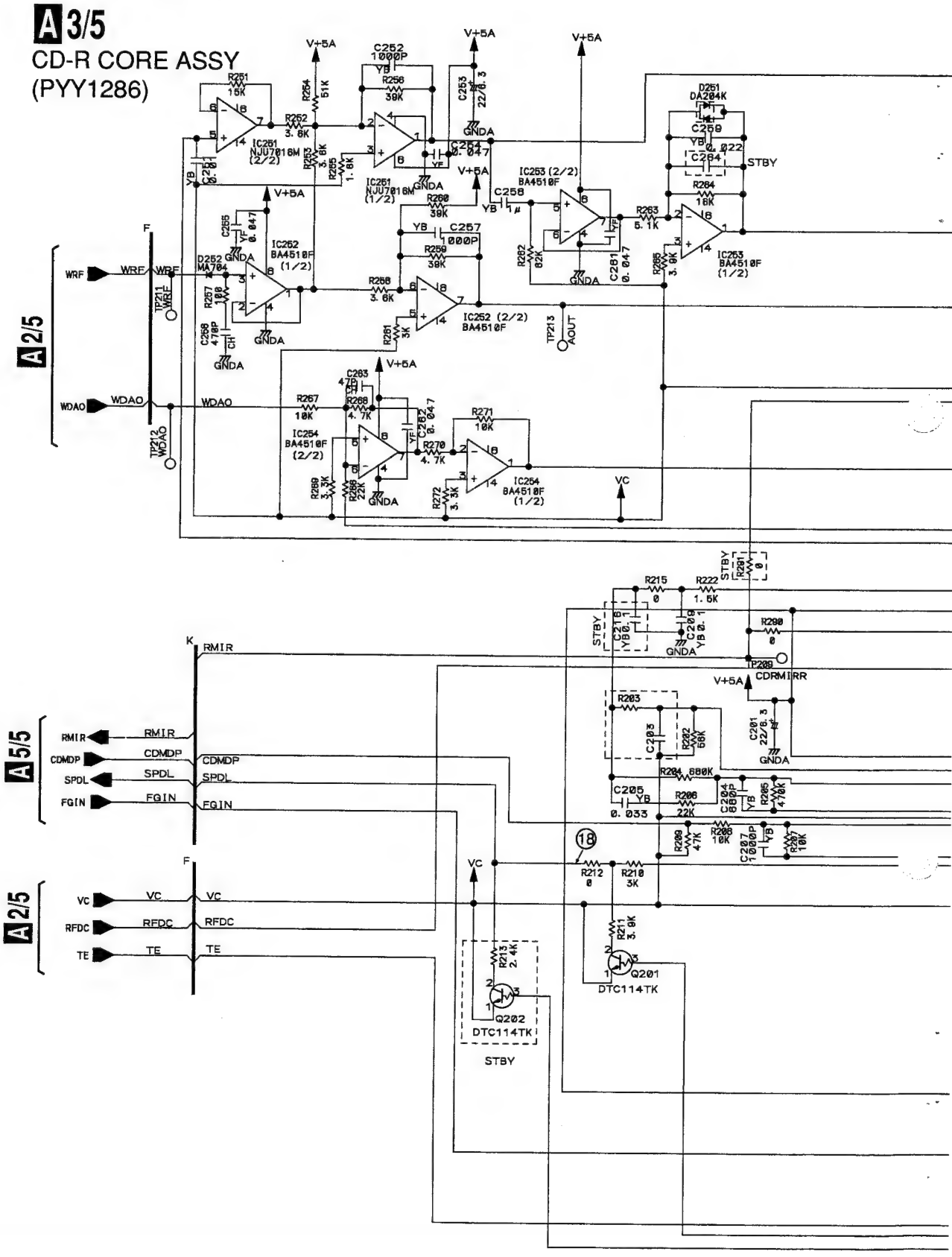

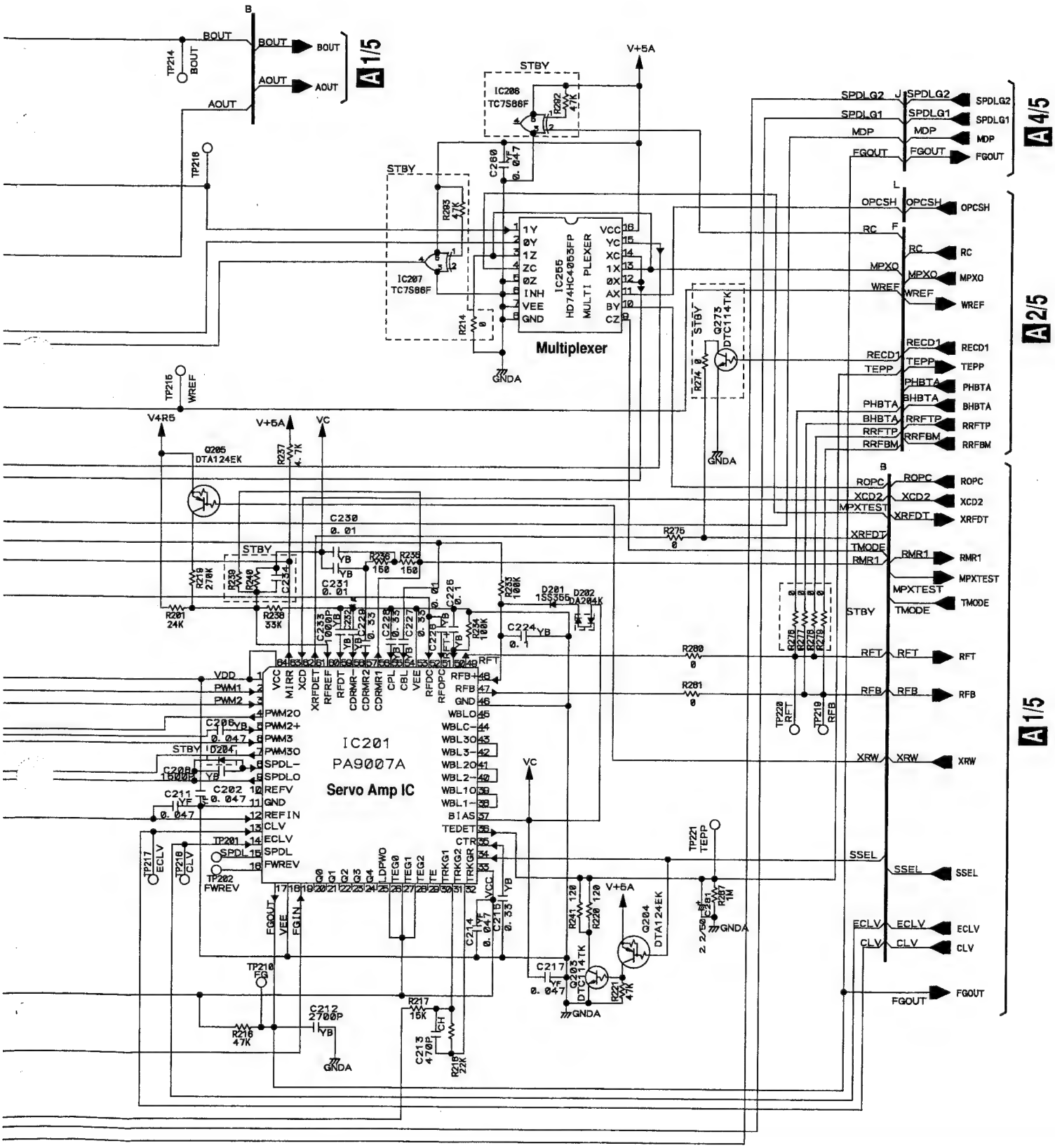
IC201
PA9007A
Servo Amp IC
IC255
HD74HC4053FP
MULTI PLEXER
Multiplexer
IC206
TC7S66F
IC207
TC7S66F
Q205
DTA124EK
Q204
DTA124EK
Q203
DTC114TK
Q273
DTC114TK
A 1/5
A 4/5
A 2/5
A 1/5
BOUT
AOUT
STBY
V+5A
V+R5
VC
GNDA
OPCSH
RC
MPXO
WREF
RECD1
TEPP
PHBTA
BHBTA
RRFTP
RRFBM
ROPC
XCD2
MPXTEST
XRFDT
TMODE
RMR1
RFT
RFB
XRW
SSEL
ECLV
CLV
FGOUT
SPDLG2
SPDLG1
MDP

3.6 CD-R CORE ASSY(4/5)

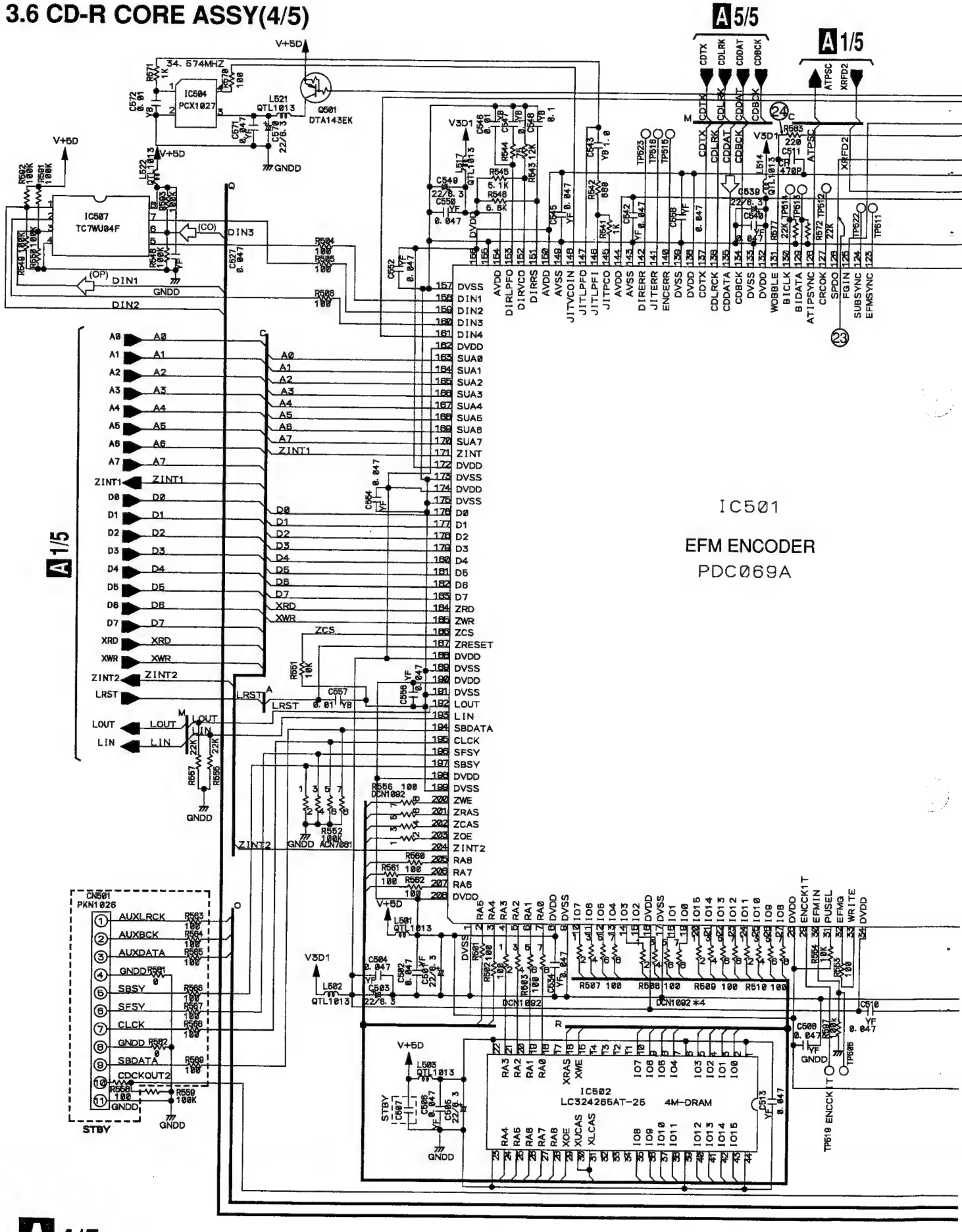

A 4/5
CD-R CORE ASSY
(PYY1286)

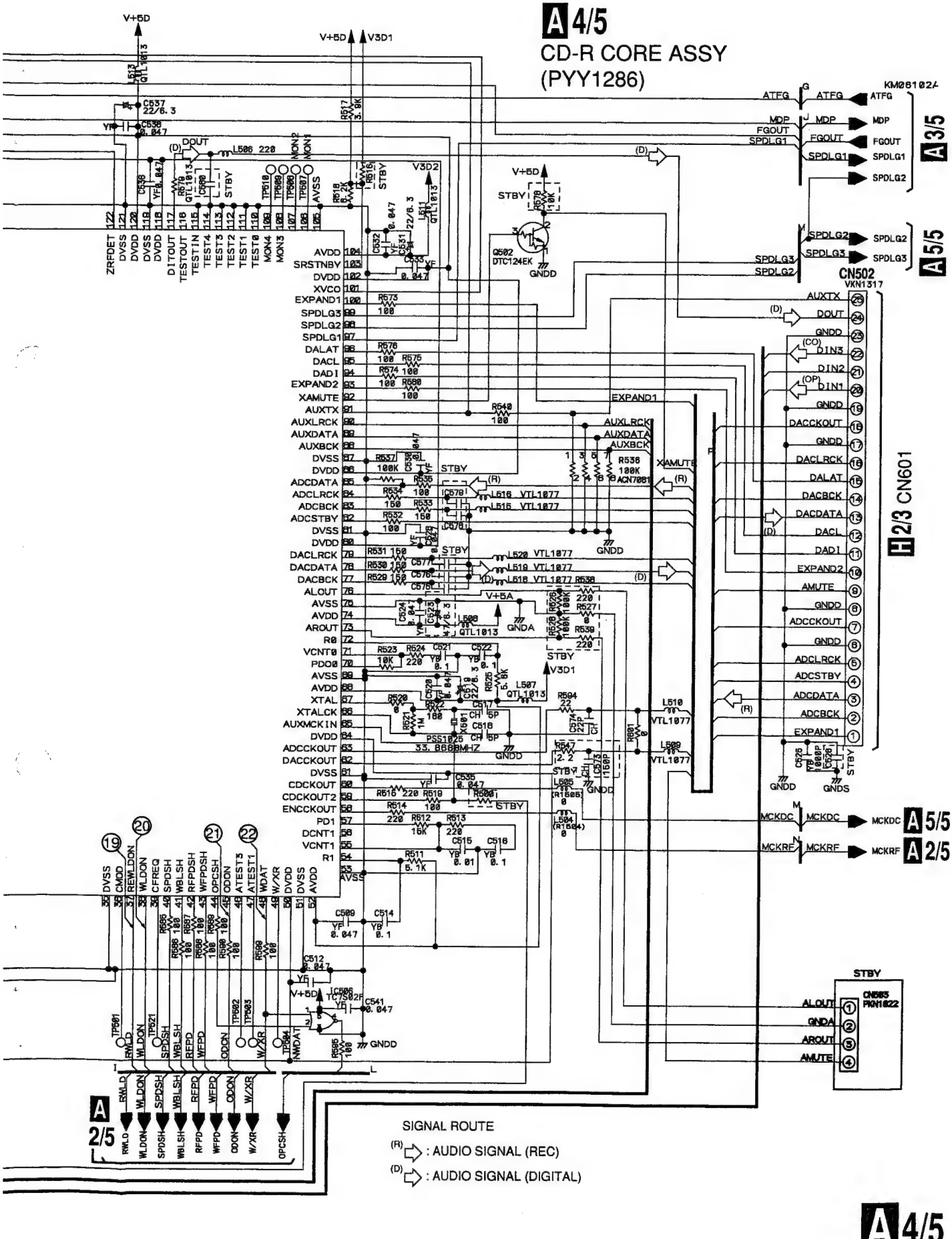

3.7 CD-R CORE ASSY(5/5),MECHA PCB ASSY and LOAB ASSY

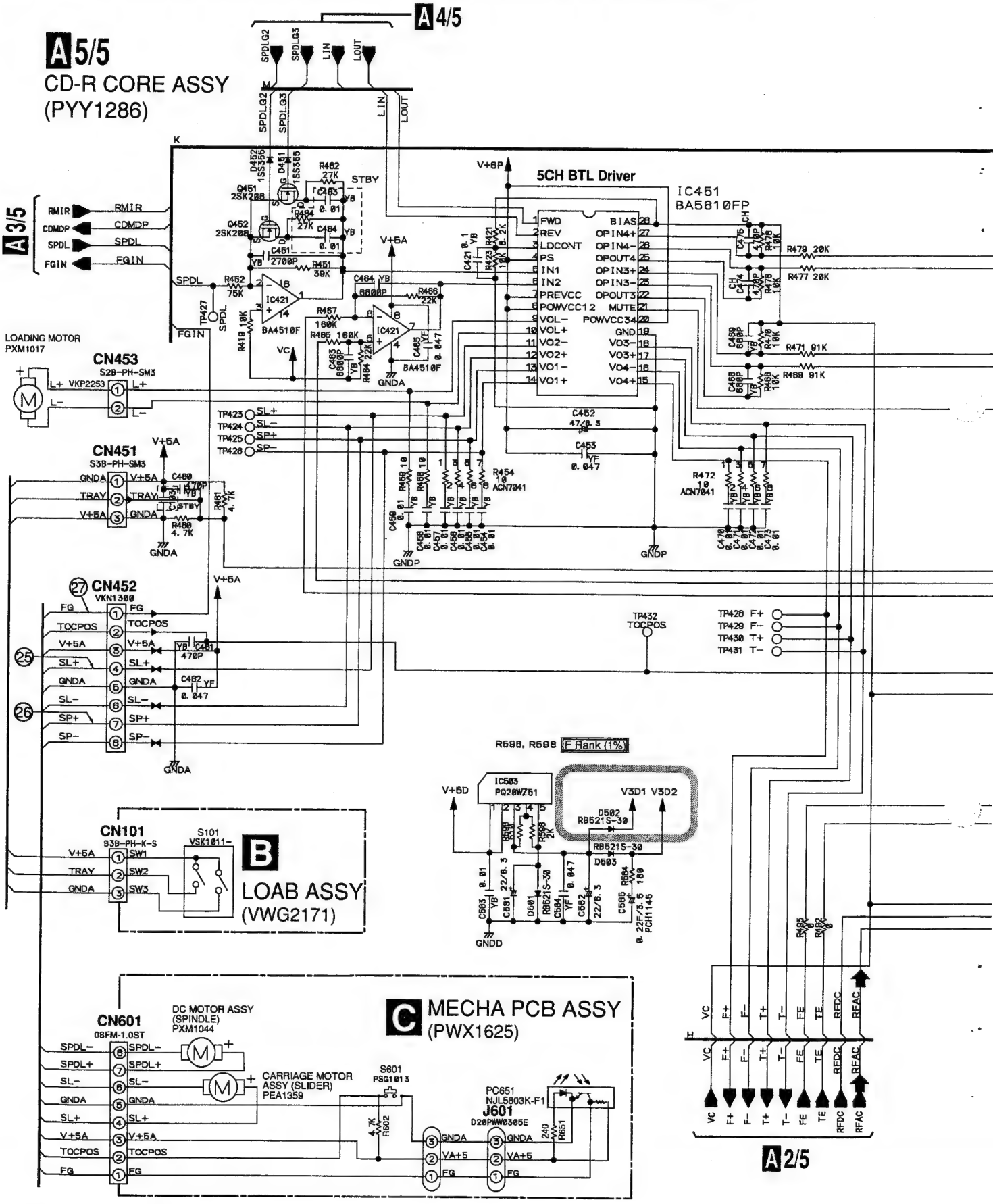

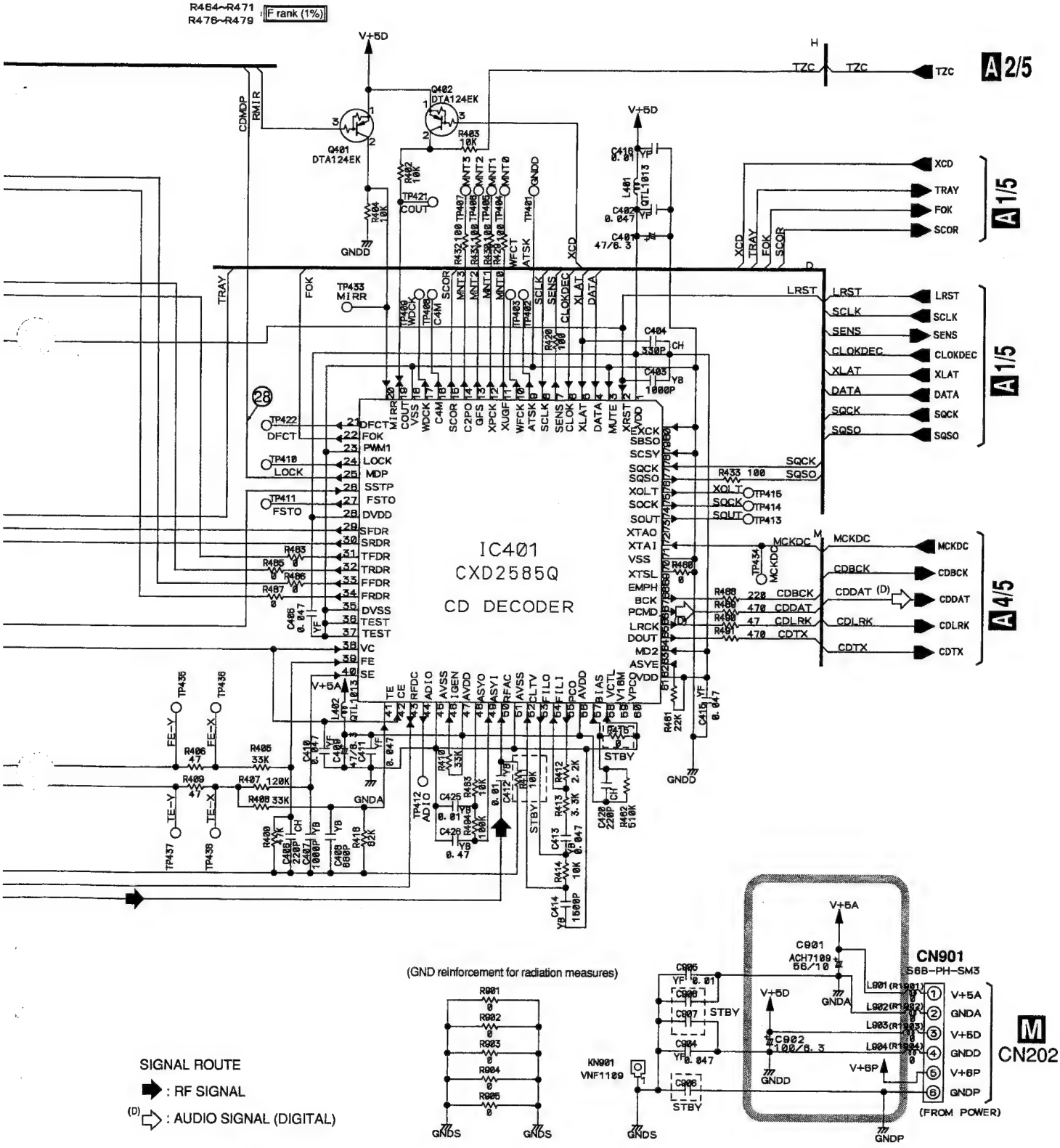

: The power supply is shown with the marked box.

■ VOLTAGES and WAVEFORMS

● Signal Logic

• Spindle System

A4/5 CD-R CORE ASSY

Media	Pickup Position	SPLG1 (IC501-pin97)	SPLG3 (IC501-pin99)
CD	Inner	5V	0V
	Outer	0V	5V
CD-R CD-RW	12cm Inner	5V	0V
	12cm Outer	0V	5V
	8cm CD-R	0V	5V
	STOP	5V	5V

* Inner: Absolute time is less than 23 minutes.
Outer: Absolute time is more than 23 minutes.

A1/5 CD-R CORE ASSY

Operating Mode	CLV (IC301-pin 30)	ECLV (IC301-pin 29)
STOP	0V	0V
CAV, W-CLV	5V	0V
E-CLV	5V	5V

* W-CLV: WOBBLECLV , E-CLV: EFMCLV

• Digital Input System

A4/5 CD-R CORE ASSY

	at FS = 44.1 kHz	Others
XVCO (IC501-pin 101)	0V	5V

	at DIGITAL LOCK	at DIGITAL UNLOCK
DIRERR (IC501-pin 142)	0V	5V

• Audio System

A4/5 CD-R CORE ASSY

	A/D Converter used	
	at Analog REC Pause, REC, Monitor	Others
ADCSTBY (CN502-pin 4)	5V	0V

	at MUTE ON (Audio Signal Not Output)	at MUTE OFF (Audio Signal Output)
AMUTE (CN502-pin 9)	5V	0V

• Others

A1/5 CD-R CORE ASSY

XPFAIL (CN302-pin 9)	5V

Note :
The encircled numbers denote measuring point in the schematic diagram.

A1/5 CD-R CORE ASSY

① CN302 - pin 1 (MSI)
V: 200mV/div. , H: 5msec/div.

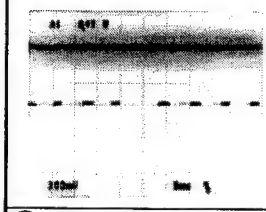

⑥ IC301 - pin 21 (CLOCKDEC)
V: 200mV/div. , H: 5msec/div.

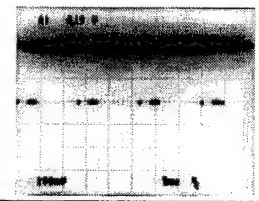

② CN302 - pin 2 (MSO)
V: 200mV/div. , H: 5msec/div.

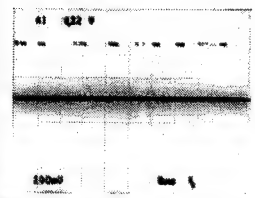

⑦ IC301 - pin 24 (XLATDEC)
V: 200mV/div. , H: 5msec/div.

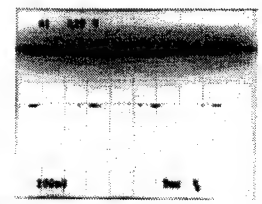

③ CN302 - pin 5 (MSCK)
V: 200mV/div. , H: 500nsec/div.
(PLAY)

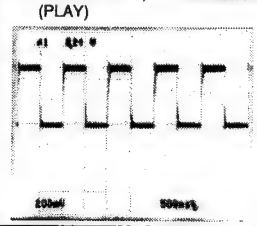

⑧ IC301 - pin 25 (CLOCKRF)
V: 200mV/div. H: 5msec/div.

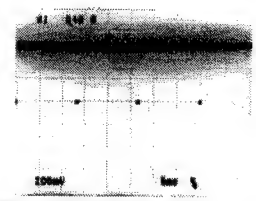

④ CN302 - pin 7 (SYSREQ)
V: 200mV/div. , H: 5msec/div.

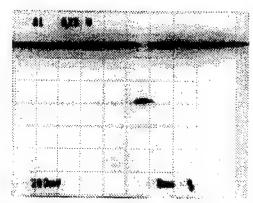

⑨ IC301 - pin 26 (DATA)
V: 200mV/div. , H: 5msec/div.

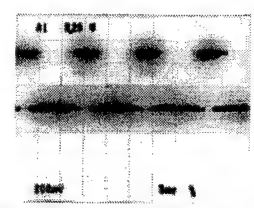

⑤ CN302 - pin 8 (MACK)
V: 200mV/div. , H: 5msec/div.

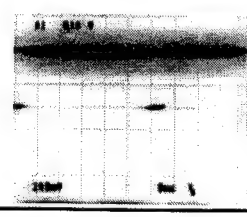

⑩ IC301 - pin 27 (XLATRF)
V: 200mV/div. , H: 5msec/div.

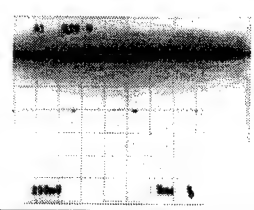

A2/5 CD-R CORE ASSY

⑪ CN101 - pin 29 (F+)
V: 200mV/div. , H: 20µsec/div.

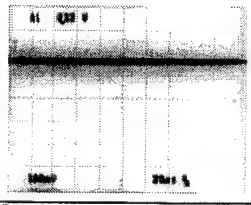

⑫ CN101 - pin 30 (T+)
V: 200mV/div. , H: 20µsec/div.

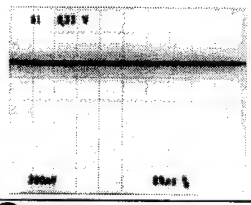

⑬ CN102 - pin 1 (EQRF)
V: 20mV/div. , H: 500nsec/div.
(PLAY)

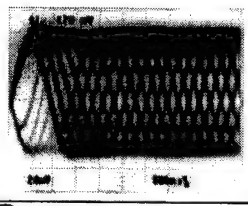

⑭ CN102 - pin 2 (RF)
V: 50mV/div. , H: 500nsec/div.
(PLAY)

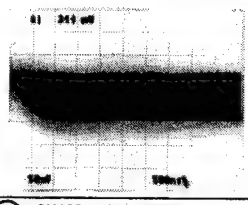

⑮ CN102 - pin 4 (MPP)
V: 20mV/div. , H: 2msec/div.
(PLAY)

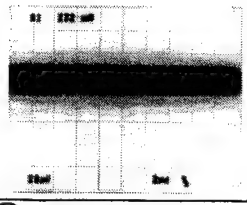

⑯ CN102 - pin 5 (TE)
V: 20mV/div. , H: 2msec/div.
(PLAY)

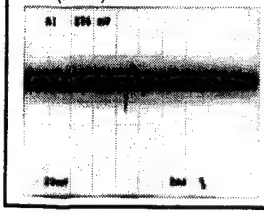

⑰ CN102-pin 8 (FE)
V: 20mV/div. , H: 2msec/div.
(PLAY)

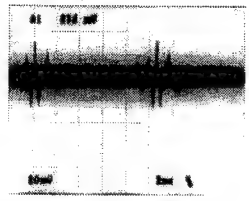

A3/5 CD-R CORE ASSY

⑱ Foot of R212 (SPDL)
V: 20mV/div. , H: 2msec/div.
(PLAY)

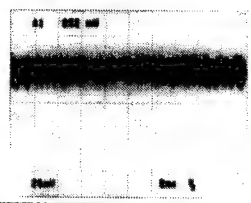

A4/5 CD-R CORE ASSY

⑲ IC501 - pin 37 (REWLDON)
V: 200mV/div. , H: 1msec/div.
(REC) RW

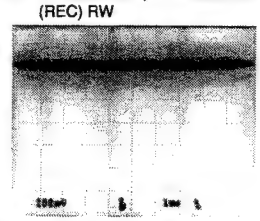

⑳ IC501 - pin 38 (WLDON)
V: 200mV/div. , H: 1msec/div.
(REC)

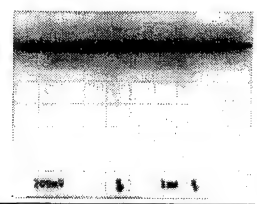

㉑ IC501 - pin 45 (ODON)
V: 200mV/div. , H: 200nsec/div.
(REC)

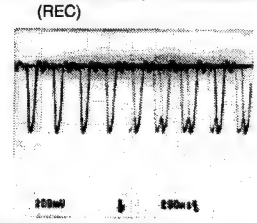

㉒ IC501 - pin 48 (WDAT)
V: 200mV/div. , H: 200nsec/div.
(REC)

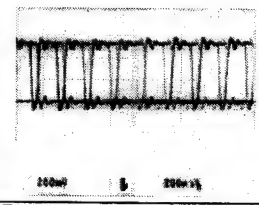

㉓ IC501 - pin 126 (SPDO)
V: 200mV/div. , H: 100µsec/div.
(REC)

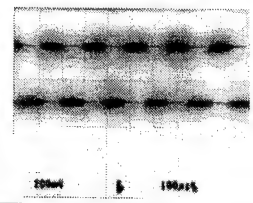

㉔ Foot of R583 (ATFG)
V: 200mV/div. , H: 20µsec/div.
(REC)

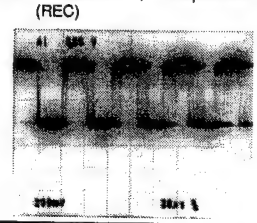

A5/5 CD-R CORE ASSY

㉕ CN452 - pin 4 (SL+)
V: 200mV/div. , H: 5msec/div.
(PLAY)

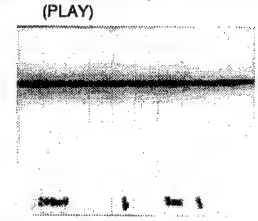

㉖ CN452 - pin 7 (SP+)
V: 200mV/div. , H: 5msec/div.
(PLAY)

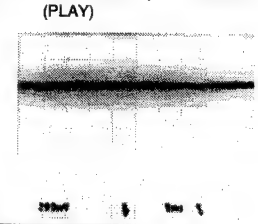

㉗ CN452 - pin 1 (FG)
V: 200mV/div. , H: 1msec/div.
(PLAY)

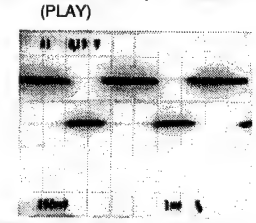

㉘ IC401 - pin 25 (MDP)
V: 200mV/div. , H: 5µsec/div.
(PLAY)

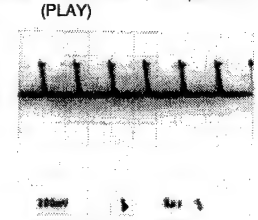

3.8 MOTOR, LOADING, SELECT and PICKUP UNITS

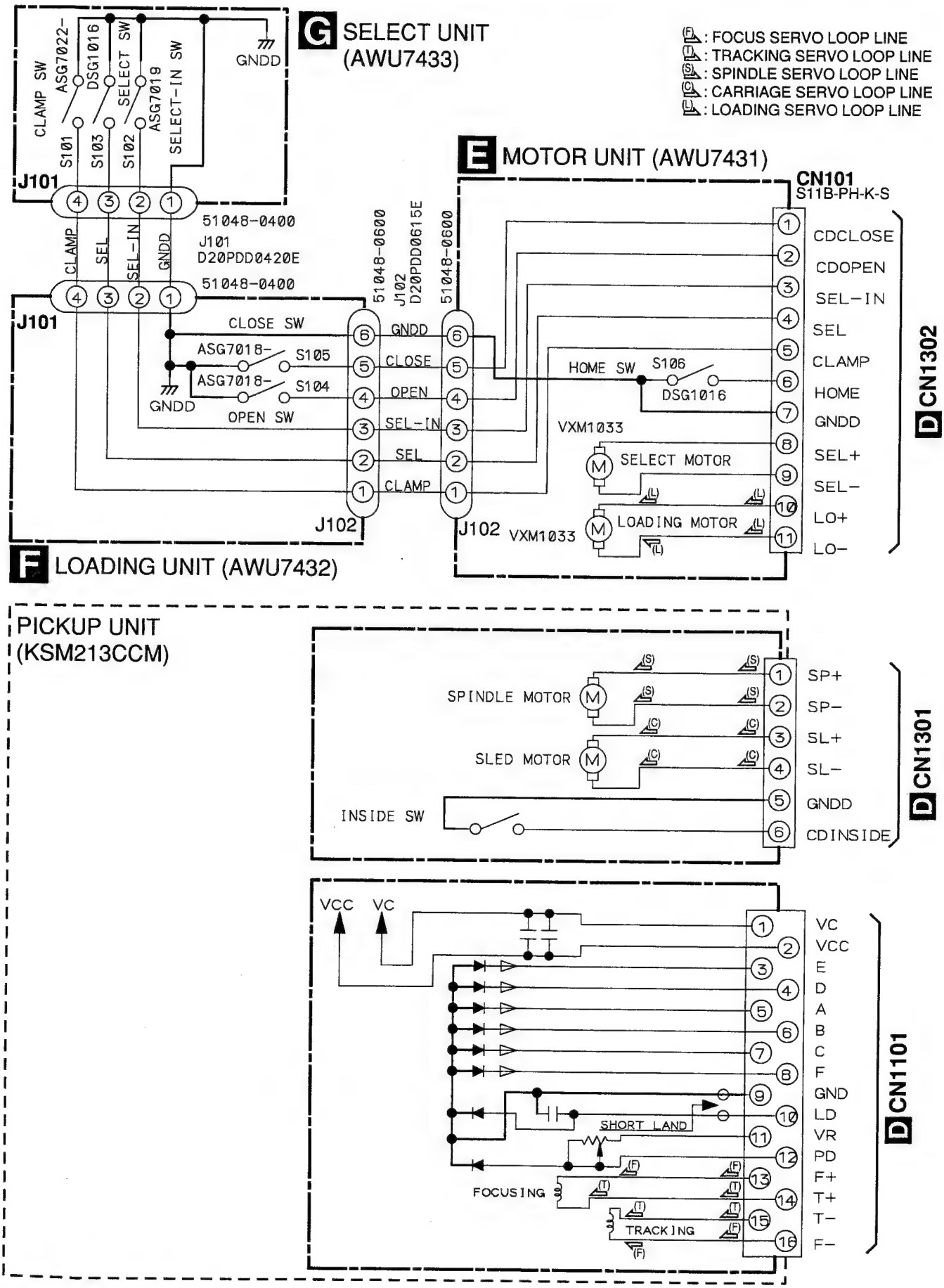

D 3CD CORE ASSY

① IC1101 - pin 25 (RFGO)
V: 50mV/div., H: 500nsec/div.
(PLAY)

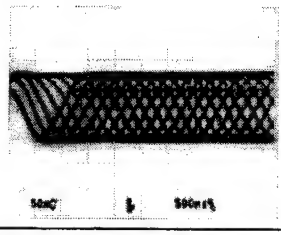

⑤ CN1201 - pin 12 (BUS0)
V: 200mV/div., H: 1msec/div.
(PLAY)

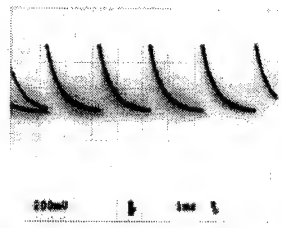

②-1 IC1201 - pin 55 (DMO)
V: 200mV/div., H: 5µsec/div.
(PLAY)

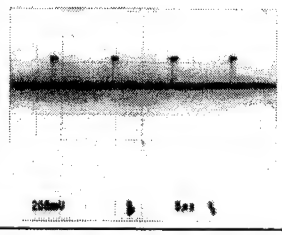

⑥ CN1201 - pin 13 (BUS1)
V: 200mV/div., H: 1msec/div.
(PLAY)

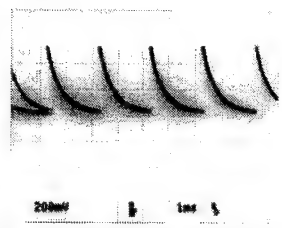

②-2 IC1201 - pin 55 (DMO)
V: 200mV/div., H: 5µsec/div.
(Hi-COPY)

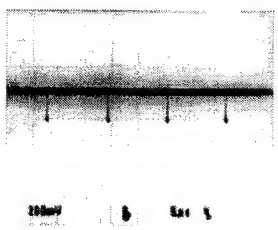

⑦ CN1201 - pin 14 (BUS2)
V: 200mV/div., H: 5msec/div.
(PLAY)

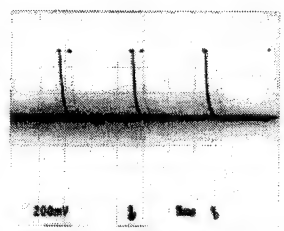

③ CN1201 - pin 10 (XCCE)
V: 200mV/div., H: 1msec/div.
(PLAY)

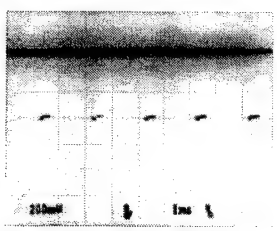

⑧ CN1201 - pin 15 (BUS3)
V: 200mV/div., H: 1msec/div.
(PLAY)

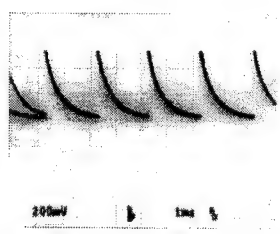

④ CN1201 - pin 11 (BUCK)
V: 200mV/div., H: 10msec/div.
(PLAY)

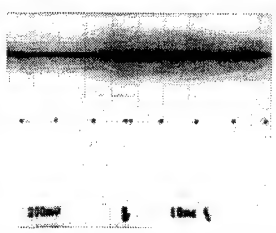

3.9 3CD CORE ASSY

D 3CD CORE ASSY (PWM2334)

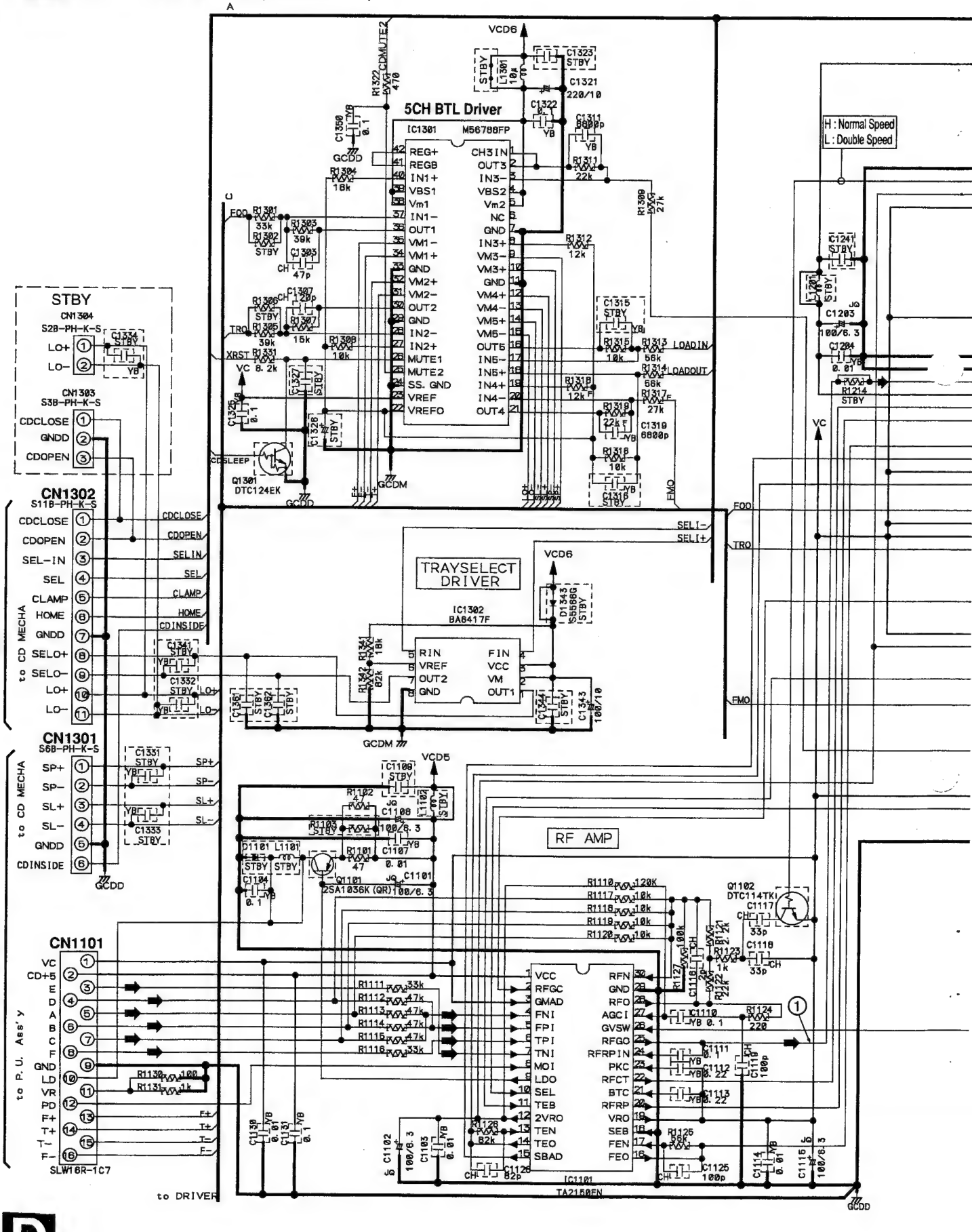

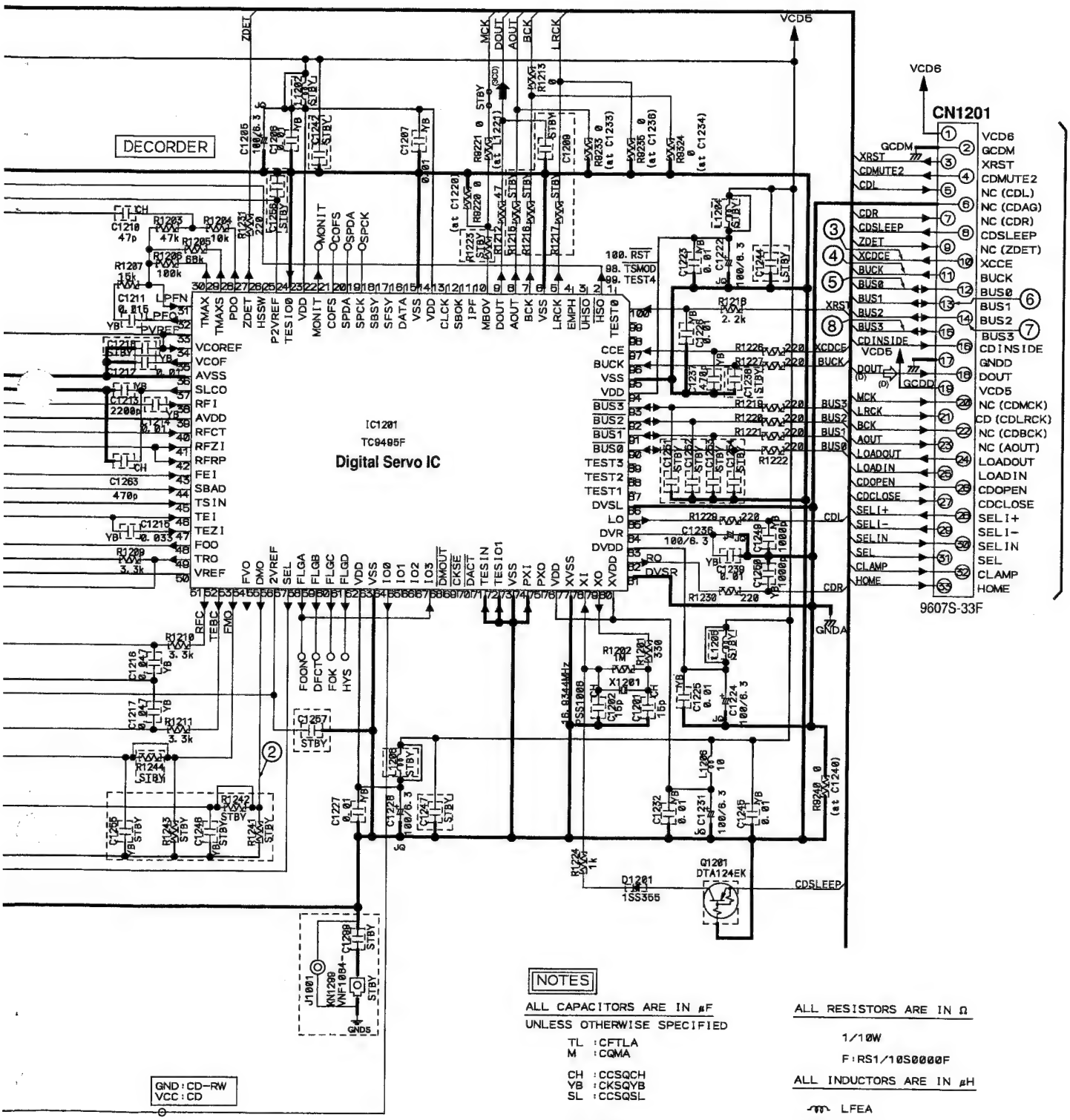

NOTES

ALL CAPACITORS ARE IN μF
UNLESS OTHERWISE SPECIFIED

TL : CFTLA
M : CQMA

CH : CCSQCH
YB : CKSQYB
SL : CCSQSL

AL : CEAL
JQ : CEJQ
(OTHER : CEAT***M###)

ALL RESISTORS ARE IN Ω

1/10W

F:RS1/10S0000F

ALL INDUCTORS ARE IN μH

LFEA

LCTB

Details and substitution are done by the part list.

SIGNAL ROUTE

➡ : RF SIGNAL

⇨ : AUDIO SIGNAL(DIGITAL)

PDR-W839
3.10 MAIN ASSY(1/3)

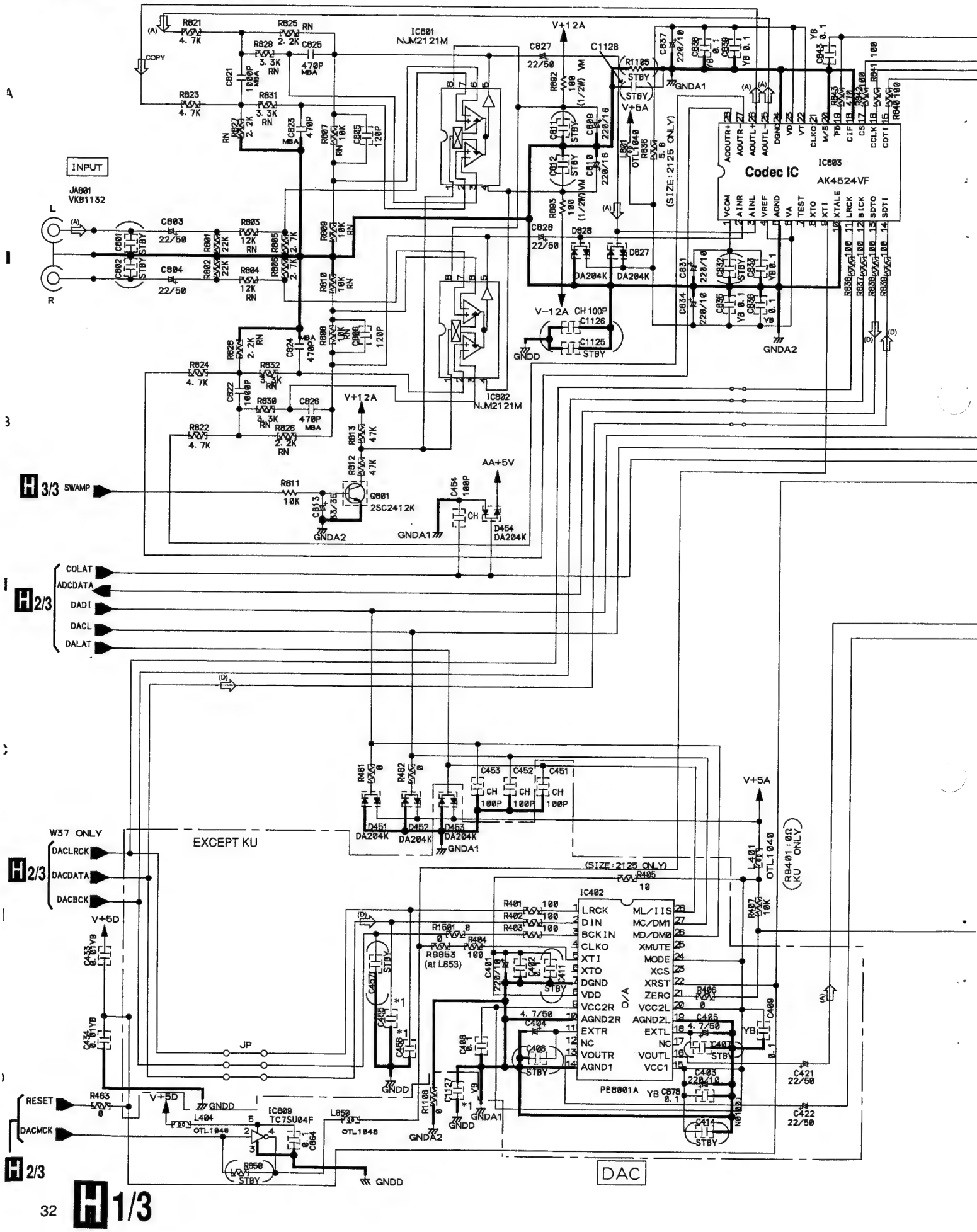

H 1/3 MAIN ASSY(1/3) (KUXJ/CA :PWM2325 ,WYXJ,WVXJ :PWM2326)

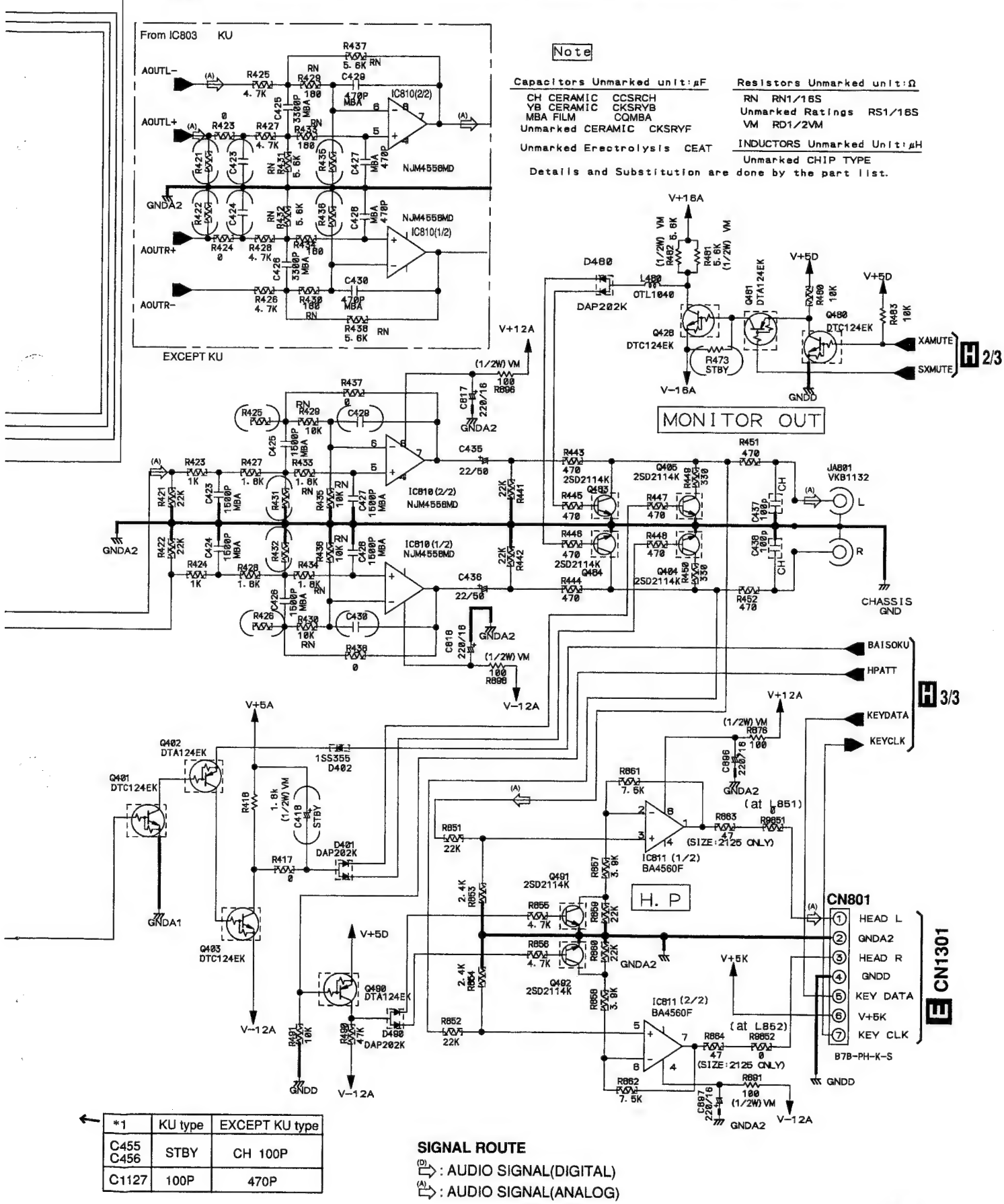

*1	KU type	EXCEPT KU type
C455 C456	STBY	CH 100P
C1127	100P	470P

SIGNAL ROUTE

(D) : AUDIO SIGNAL(DIGITAL)

(A) : AUDIO SIGNAL(ANALOG)

PDR-W839
3.11 MAIN ASSY(2/3)

H 2/3 MAIN ASSY(2/3) (KUXJ/CA :PWM2325 ,WYXJ,WVXJ :PWM2326)

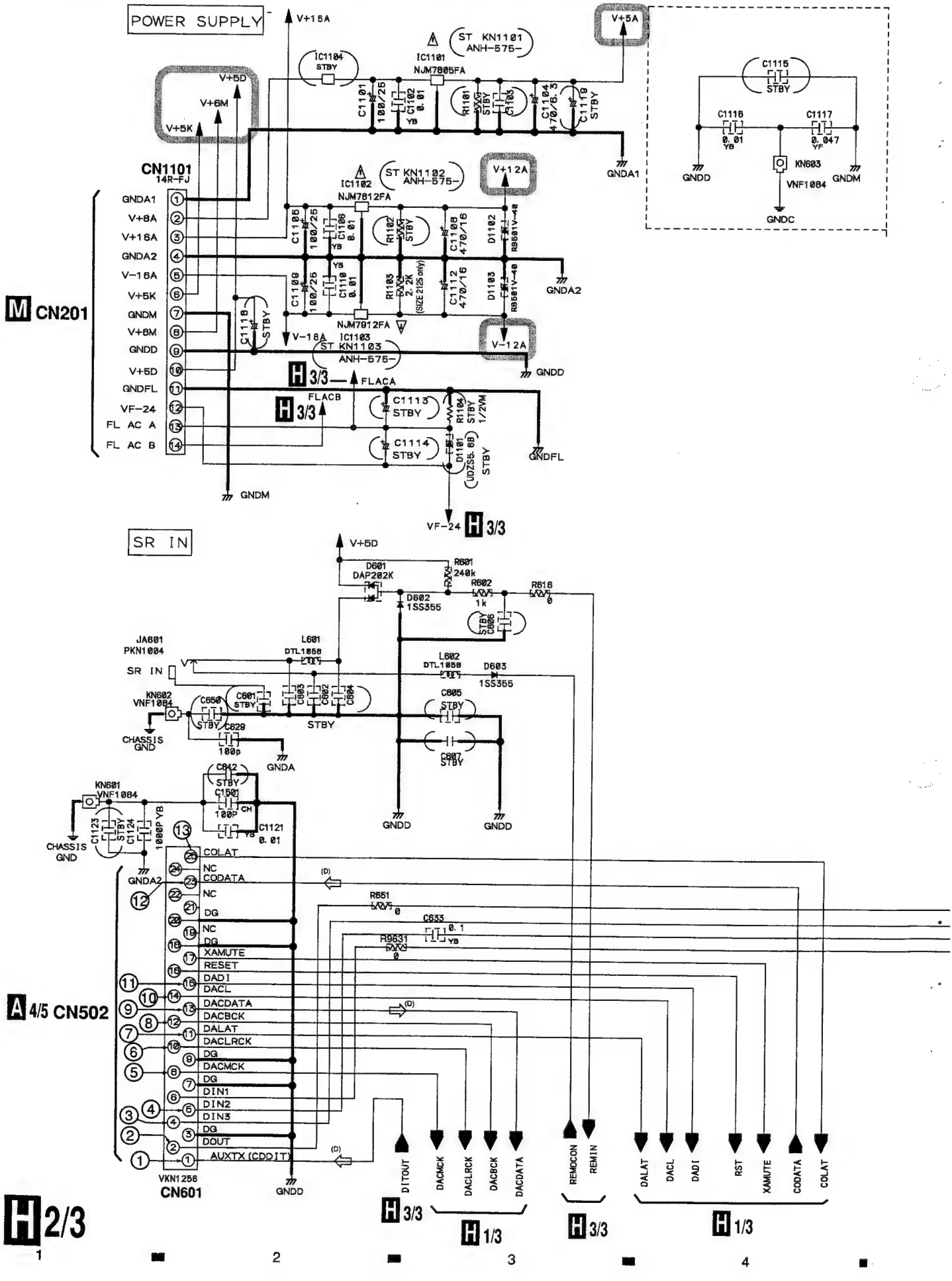

: The power supply is shown with the marked box.

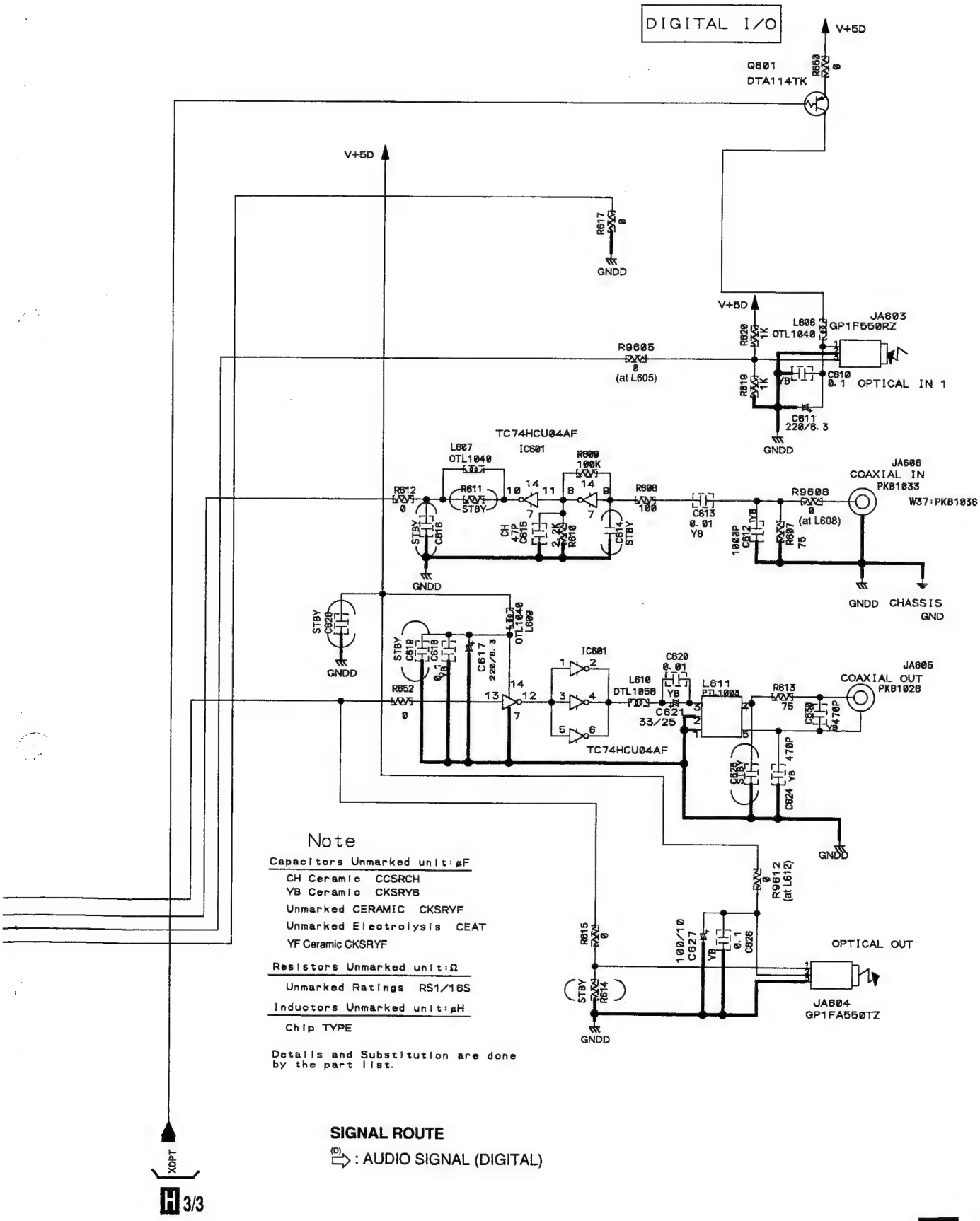

Note

Capacitors Unmarked unit: μF
- CH Ceramic CCSRCH
- YB Ceramic CKSRYB
- Unmarked CERAMIC CKSRYF
- Unmarked Electrolysis CEAT
- YF Ceramic CKSRYF

Resistors Unmarked unit: Ω
- Unmarked Ratings RS1/16S

Inductors Unmarked unit: μH
- Chip TYPE

Details and Substitution are done by the part list.

SIGNAL ROUTE

(D) : AUDIO SIGNAL (DIGITAL)

XOPT

H 3/3

PDR-W839

3.12 MAIN ASSY(3/3)

H 3/3 MAIN ASSY

(KUXJ/CA :PWM2325 ,WYXJ,WVXJ :PWM2326)

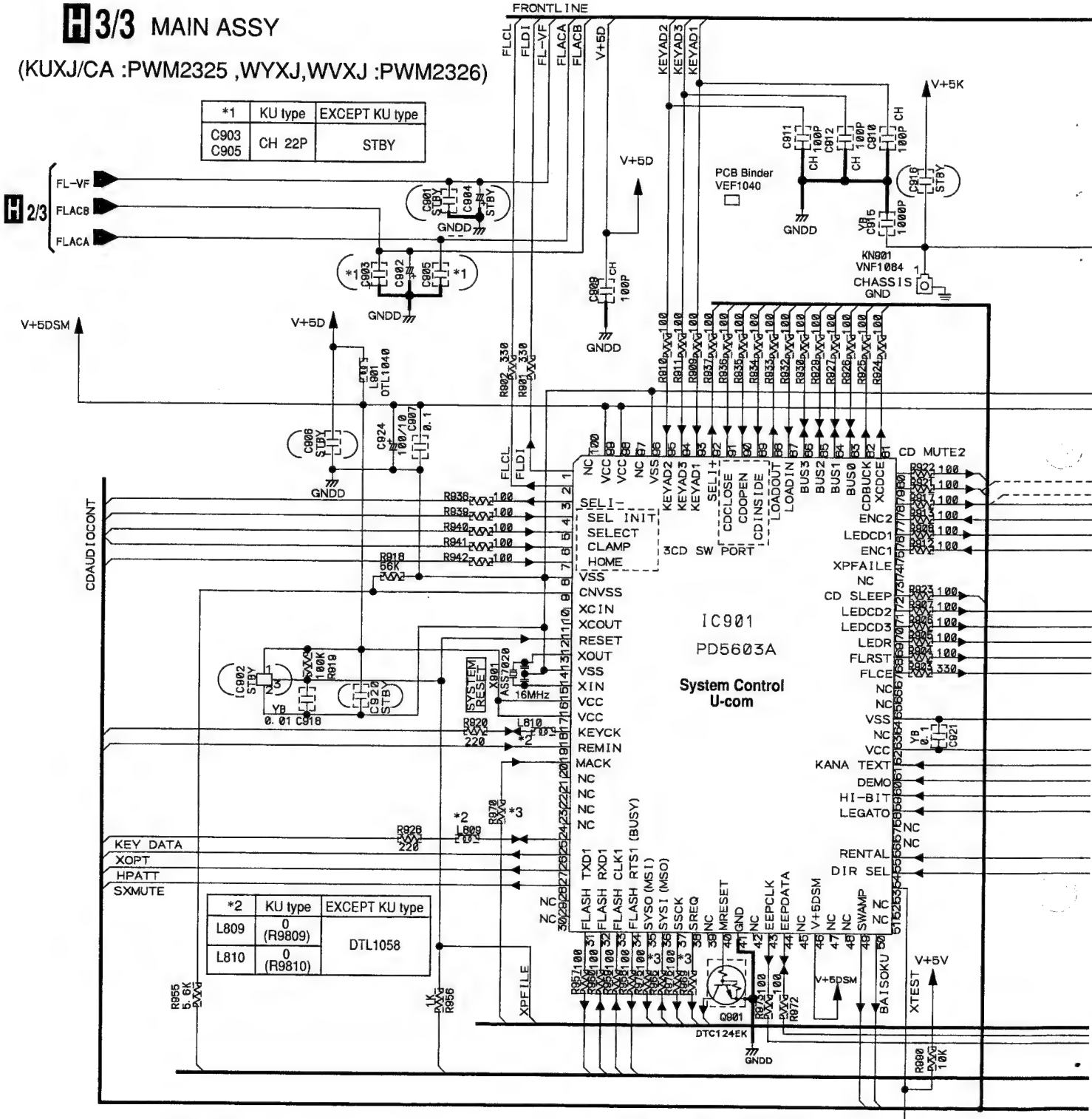

*1	KU type	EXCEPT KU type
C903 C905	CH 22P	STBY

*2	KU type	EXCEPT KU type
L809	0 (R9809)	DTL1058
L810	0 (R9810)	

*3	KU type	EXCEPT KU type
R965	220	0
R966 R967		100
R968		0
R969 R970 R971		100

NOTES

CAPACITORS	UNMARKED UNIT : μF
YB CERAMIC	CKSRYB
CH CERAMIC	CKSRCH
UNMARKED CERAMIC	CKSRYF
UNMARKED ELECTROLYSIS	CEAT

INDUCTORS	UNIT: μH
UNMARKED	CHIP TYPE

RESISTORS	UNIT: Ω
UNMARKED	RS1/16S

Details and substitution are done by the part list.

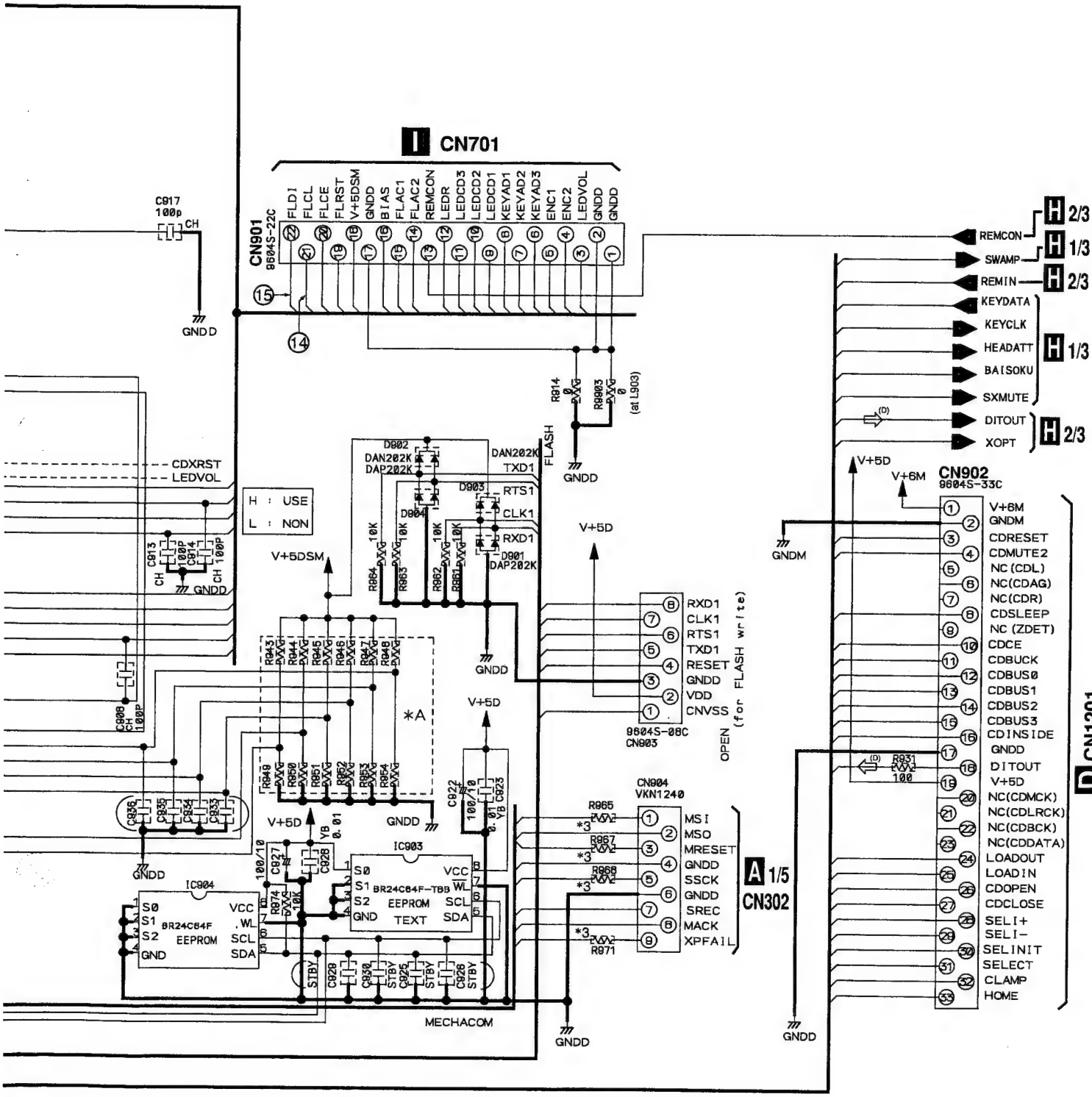

SIGNAL ROUTE

(D) : AUDIO SIGNAL (DIGITAL)

*A

TYPES			KU		WY/WV	
FUNCTION	O	X	O	X	O	X
TWO OPTICAL DIGITAL INPUTS	R943	R949		O		O
RENTAL COPY	R944	R950		O		O
LEGATO LINK CONVERSION	R945	R951		O	O	
HI-BIT	R946	R952		O		O
DEMO INDICATION	R947	R953		O		O
AVAILABLE FOR JAPANESE KEYBOARD	R948	R954		O		O

R943~R954 : 10K

H1/3 MAIN ASSY

H3/3 MAIN ASSY

① **CN601 - pin 1 (AUXTX)** V: 200mV/div., H: 200nsec/div. 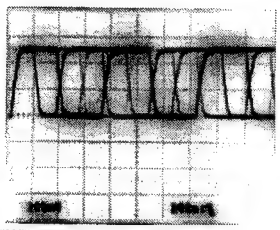	⑥ **CN601 - pin 10 (DACLRCK)** V: 200mV/div., H: 10µsec/div. 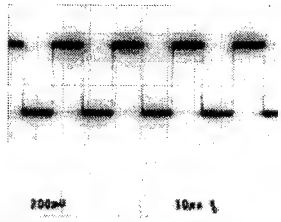	⑪ **CN601 - pin 15 (DADI)** V: 200mV/div., H: 5msec/div. 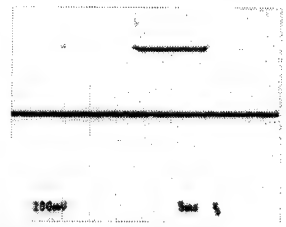	⑭ **CN901 - pin 21 (FLCL)** V: 200mV/div., H: 10msec/div. 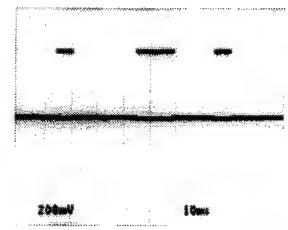
② **CN601 - pin 2 (DOUT)** V: 200mV/div., H: 200nsec/div. 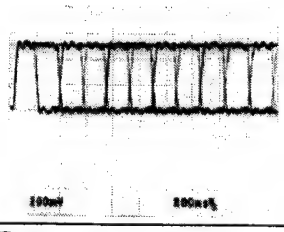	⑦ **CN601 - pin 11 (DALAT)** V: 200mV/div., H: 200µsec/div. 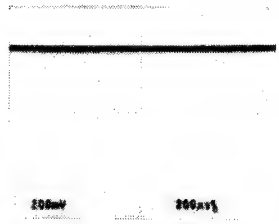	⑫ **CN601 - pin 23 (CODATA)** V: 200mV/div., H: 500nsec/div. 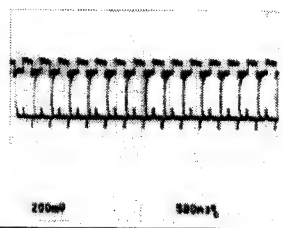	⑮ **CN901 - pin 22 (FLDI)** V: 200mV/div., H: 10msec/div. 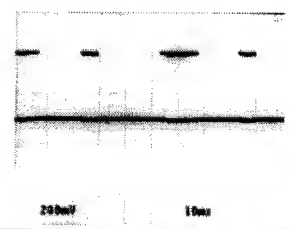
③ **CN601 - pin 4 (DIN3)** V: 200mV/div., H: 200nsec/div. (REC) 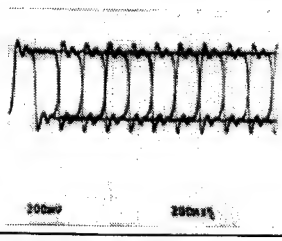	⑧ **CN601 - pin 12 (DABCK)** V: 200mV/div., H: 200nsec/div. 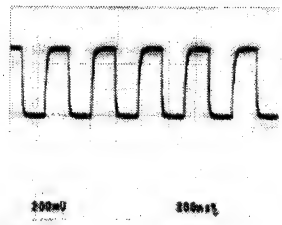	⑬ **CN601 - pin 25 (COLAT)** V: 200mV/div., H: 5msec/div. 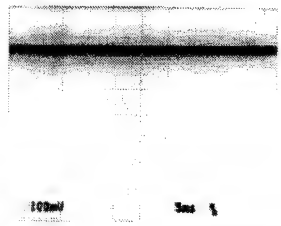	
④ **CN601 - pin 5 (DIN2)** V: 200mV/div., H: 200nsec/div. (REC) 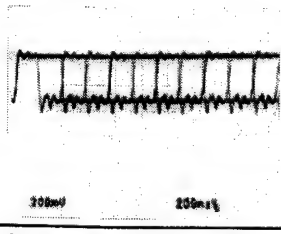	⑨ **CN601 - pin 13 (DACDATA)** V: 200mV/div., H: 200nsec/div. 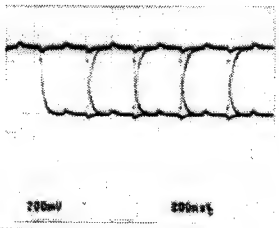		
⑤ **CN601 - pin 8 (DACMCK)** V: 200mV/div., H: 20nsec/div. 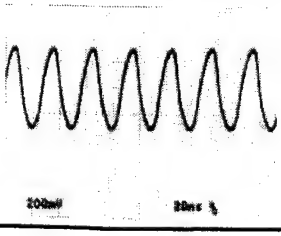	⑩ **CN601 - pin 14 (DACL)** V: 200mV/div., H: 5msec/div. 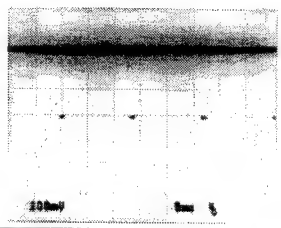		

3.13 HEAD PHONE, OPERATING1, OPERATING2 and OPERATING3 ASSYS

L 1/2 HEADPHONE ASSY H 1/3 CN801

(KUXJ/CA : PWZ4157)
(WYXJ/WVXJ : PWZ4158)

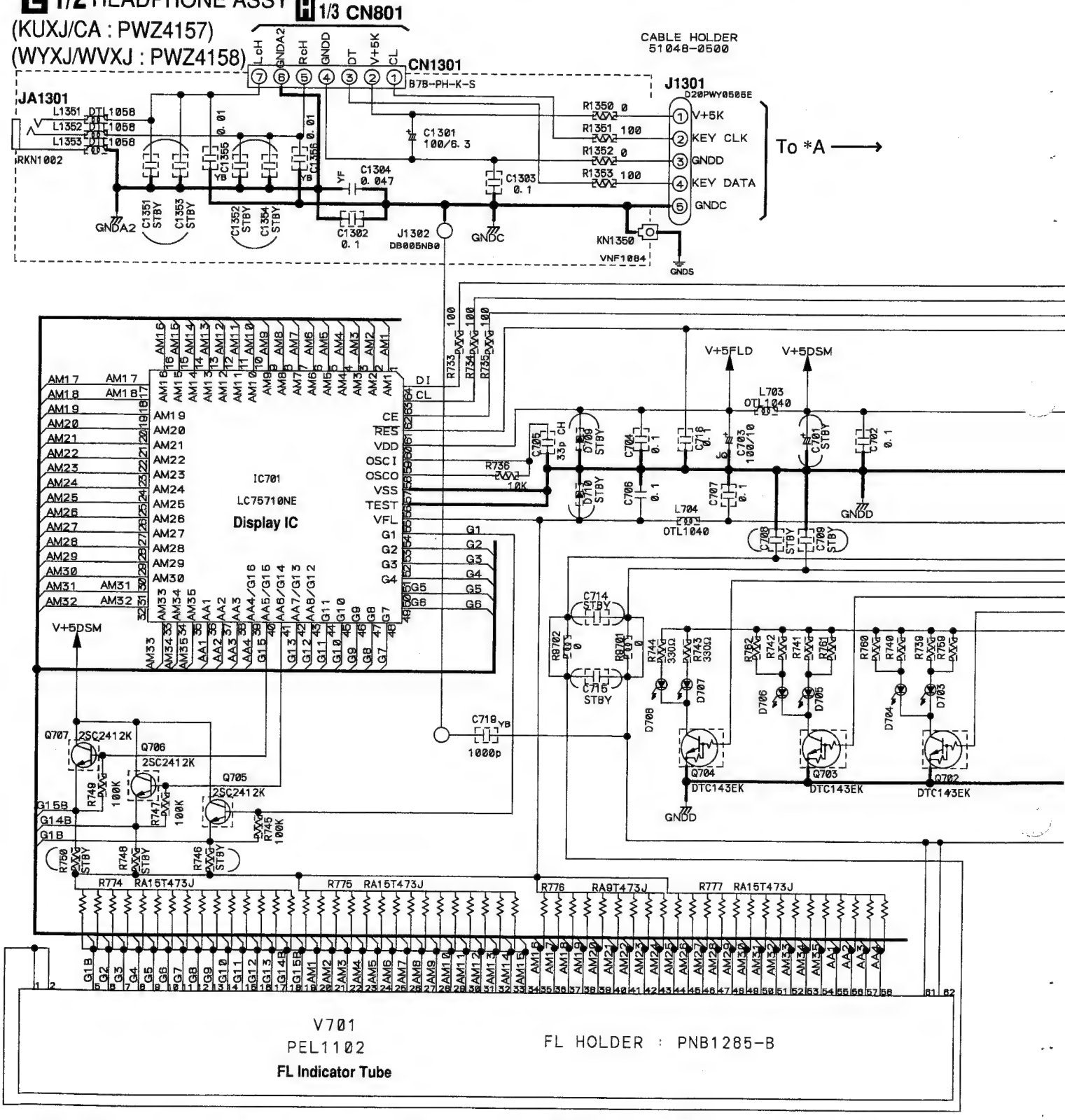

NOTES

CAPACITORS UNMARKED UNIT : μF

YB	CERAMIC	CKSRYB
CH	CERAMIC	CKSRCH
YF	CERAMIC	CKCYF
UNMARKED	CERAMIC	CKSRYF
JQ		CEJQ
UNMARKED	ELECTROLYSIS	CEAT

INDUCTORS UNIT : μH

UNMARKED CHIP TYPE

RESISTORS UNIT : Ω

UNMARKED RS1/16S

Details and substitution are done by the part list.

I OPERATING 1 ASSY

(KUXJ/CA : PWZ4133)
(WYXJ/WVXJ : PWZ4134)

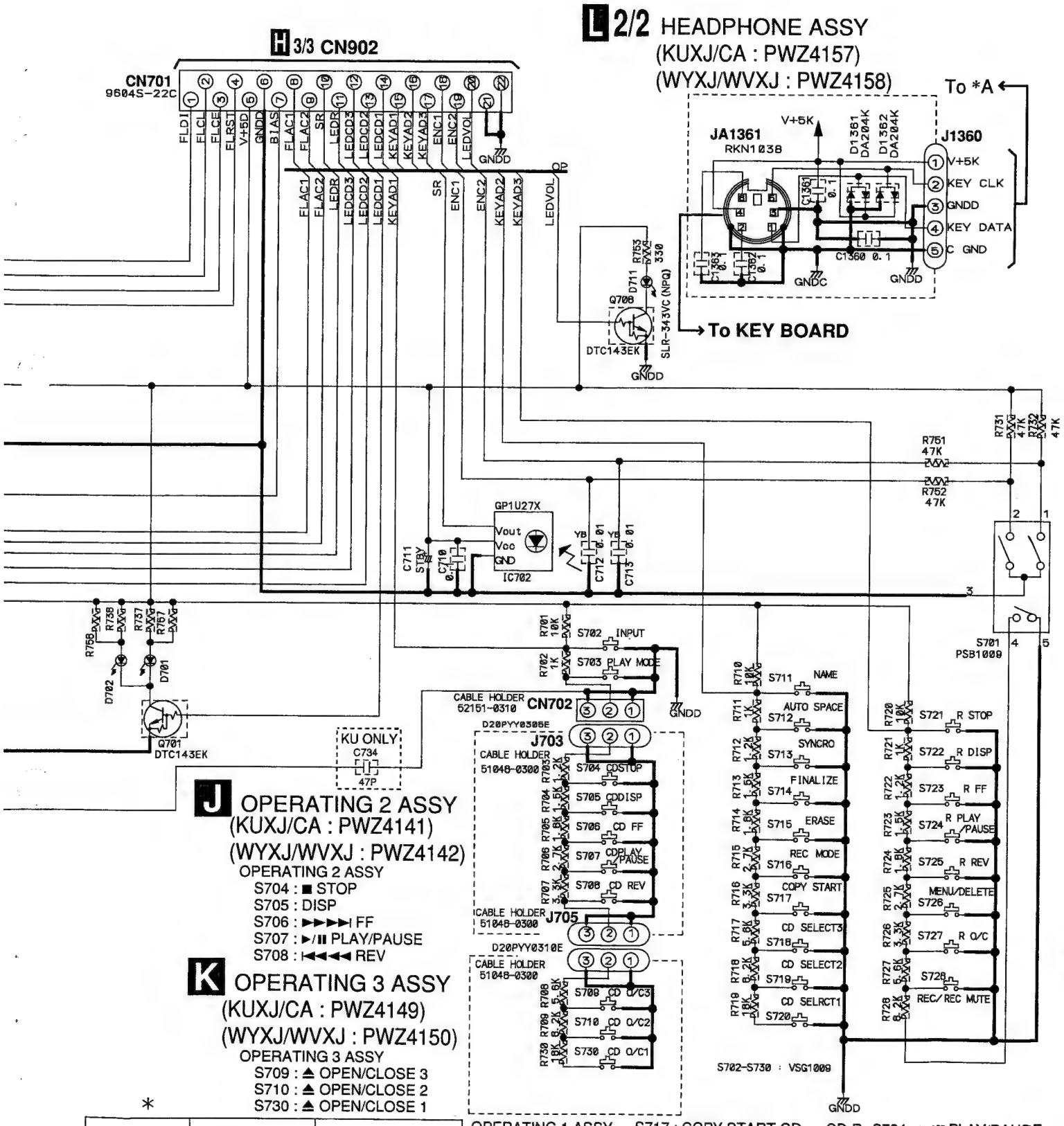

J OPERATING 2 ASSY
(KUXJ/CA : PWZ4141)
(WYXJ/WVXJ : PWZ4142)

OPERATING 2 ASSY
- S704 : ■ STOP
- S705 : DISP
- S706 : ▶▶▶▶I FF
- S707 : ▶/II PLAY/PAUSE
- S708 : I◀◀◀◀ REV

K OPERATING 3 ASSY
(KUXJ/CA : PWZ4149)
(WYXJ/WVXJ : PWZ4150)

OPERATING 3 ASSY
- S709 : ▲ OPEN/CLOSE 3
- S710 : ▲ OPEN/CLOSE 2
- S730 : ▲ OPEN/CLOSE 1

*

Distination	/WYXJ, /WVXJ	/KUXJ/CA
D701~D706	SLR-343MC (NPQ) GREEN	SLR-343DC (NPQ) ORANGE
D707, D708	SLR-343VC (NPQ) RED	
R737~R742 R757~R762	240	430

OPERATING 1 ASSY
- S711 : NAME
- S712 : AUTO SPACE
- S713 : SYNCHRO
- S714 : FINALIZE
- S715 : ERASE
- S716 : REC MODE
- S717 : COPY START CD → CD-R
- S718 : CD SELECT 3
- S719 : CD SELECT 2
- S720 : CD SELECT 1
- S721 : ■ STOP
- S722 : DISP
- S723 : ▶▶▶▶I FF
- S724 : ▶/II PLAY/PAUSE
- S725 : I◀◀◀◀ REV
- S726 : MENU/DELETE
- S727 : OPEN/CLOSE
- S728 : REC/REC MUTE

4.13 POWER SUPPLY ASSY

M POWER SUPPLY UNIT (PWR1029)

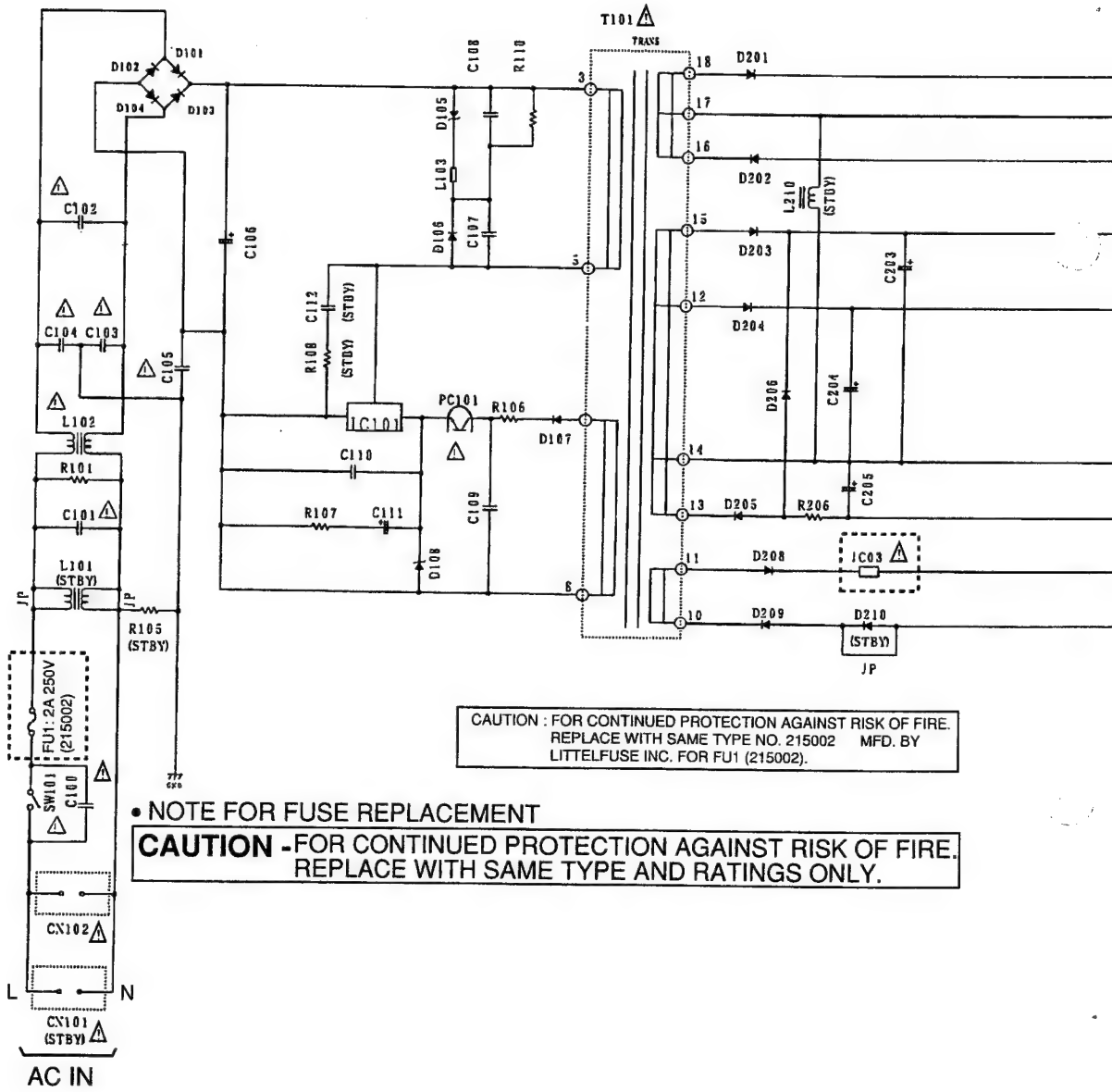

CAUTION : FOR CONTINUED PROTECTION AGAINST RISK OF FIRE.
REPLACE WITH SAME TYPE NO. 215002 MFD. BY
LITTELFUSE INC. FOR FU1 (215002).

• NOTE FOR FUSE REPLACEMENT

CAUTION - FOR CONTINUED PROTECTION AGAINST RISK OF FIRE.
REPLACE WITH SAME TYPE AND RATINGS ONLY.

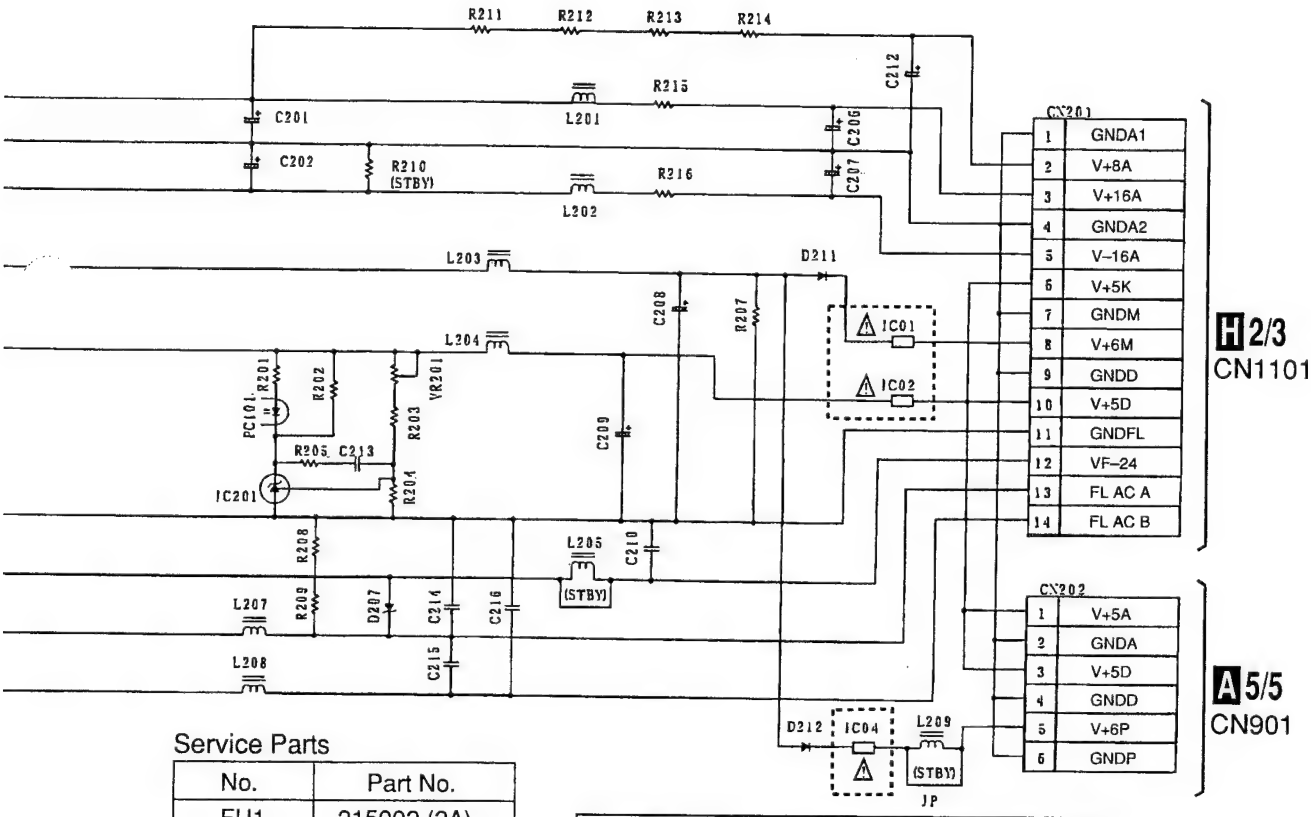

Service Parts

No.	Part No.
FU1	215002 (2A)
IC01	49101.6 (1.6A)
IC02	49101.6 (1.6A)
IC03	491.800 (0.8A)
IC04	49101.6 (1.6A)

CAUTION : FOR CONTINUED PROTECTION AGAINST RISK OF FIRE.
REPLACE WITH SAME TYPE NO. 491.800 MFD. BY
LITTELFUSE INC. FOR IC3 (491.800).

CAUTION : FOR CONTINUED PROTECTION AGAINST RISK OF FIRE.
REPLACE WITH SAME TYPE NO. 49101.6 MFD. BY
LITTELFUSE INC. FOR IC1, IC2 and IC4 (49101.6).

[ ] marked parts: Only these parts are supplied as service parts.

4. PCB CONNECTION DIAGRAM

NOTE FOR PCB DIAGRAMS :

1. Part numbers in PCB diagrams match those in the schematic diagrams.
2. A comparison between the main parts of PCB and schematic diagrams is shown below.

Symbol In PCB Diagrams	Symbol In Schematic Diagrams	Part Name
B C E	B C E B C E	Transistor
B C E	B C E B C E	Transistor with resistor
D G S	D G S D G S	Field effect transistor
		Resistor array
		3-terminal regulator

3. The parts mounted on this PCB include all necessary parts for several destinations.
   For further information for respective destinations, be sure to check with the schematic diagram.
4. View point of PCB diagrams.

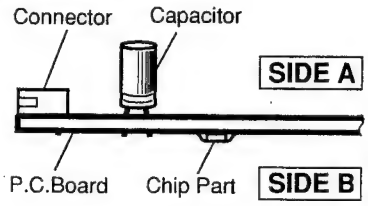

4.1 SELECT UNIT ,LOADING UNIT and MOTOR UNIT

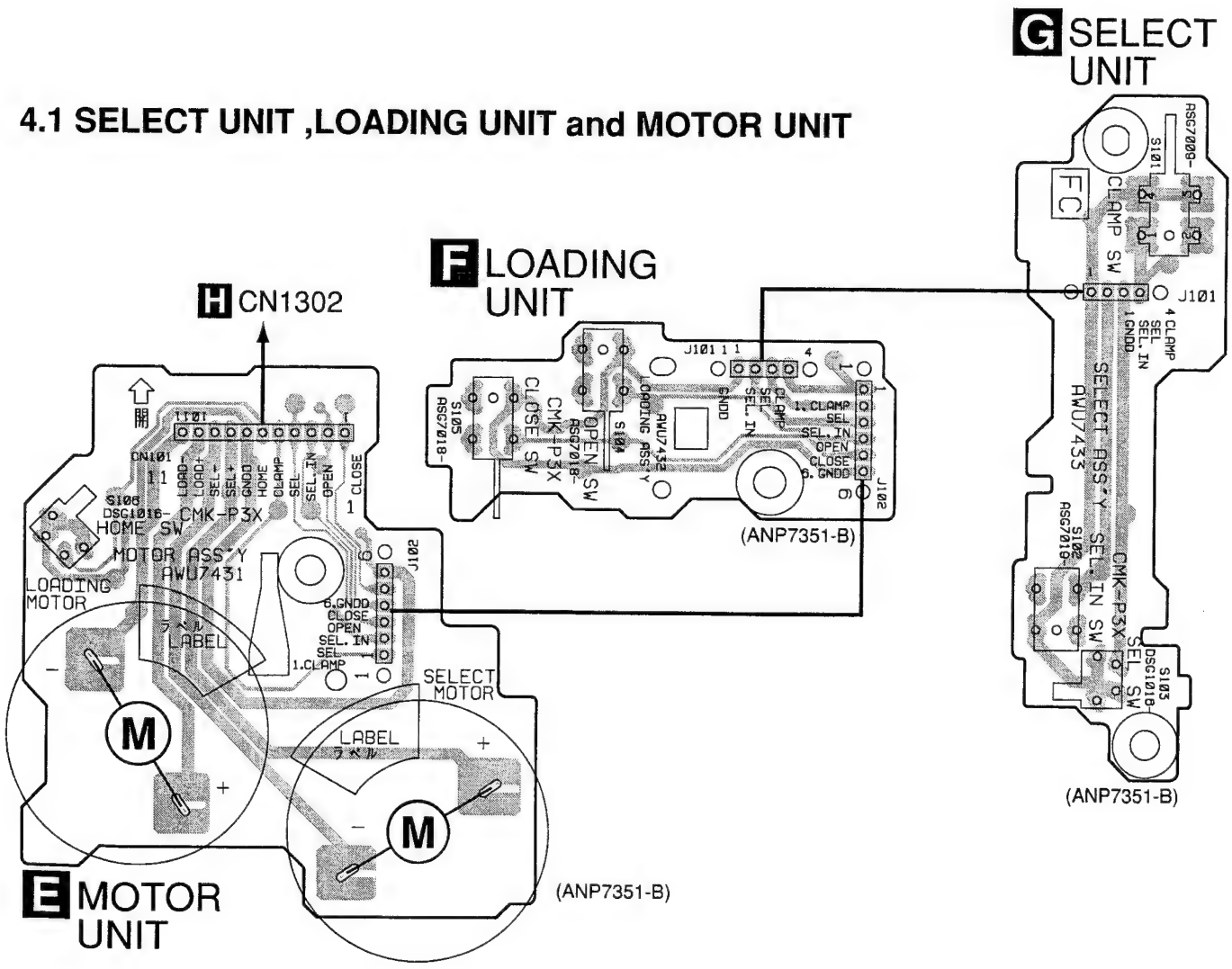

4.2 MECHA PCB ASSY and LOAB ASSY

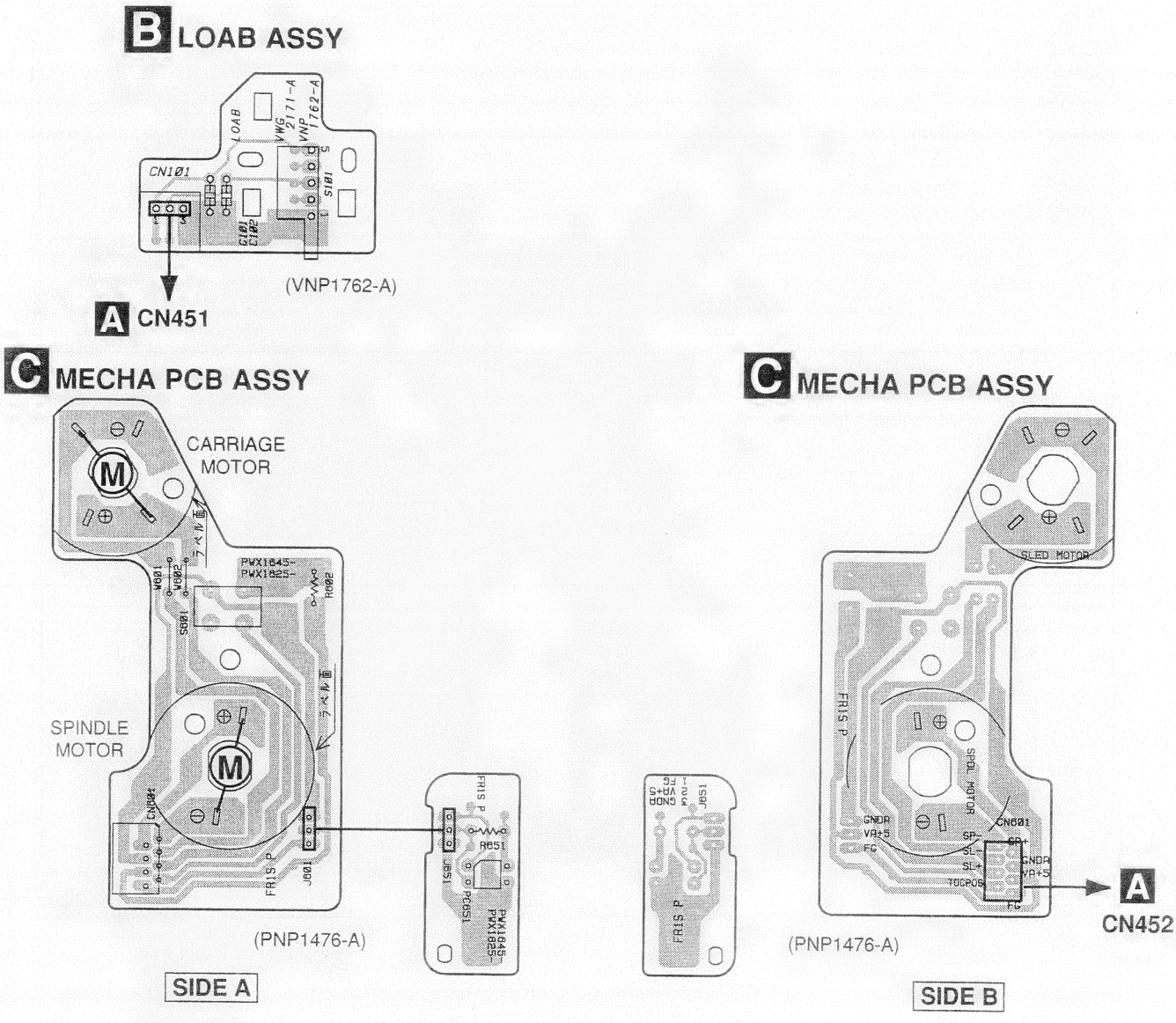

4.3 CD-R CORE ASSY

A CDR CORE ASSY

SIDE A

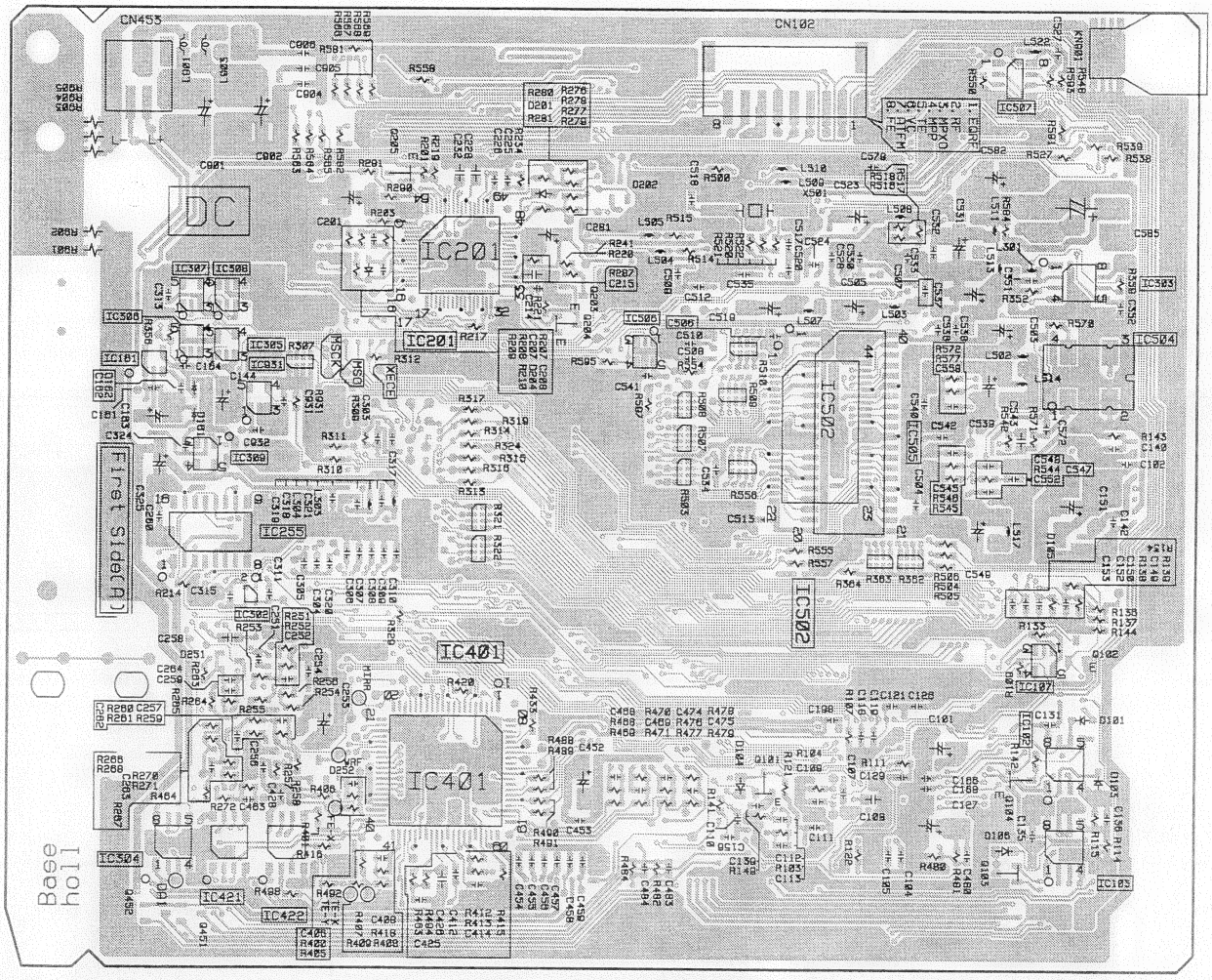

(PNP1477-B)

IC307 IC308 Q205 IC507
IC1161 IC306 IC305 IC201 IC506 IC303
IC309 IC931 IC502 IC505 IC504
IC255
IC302 IC107
IC304 IC421 IC422 IC401 Q101 Q104 IC102
Q103 IC103

A CDR CORE ASSY

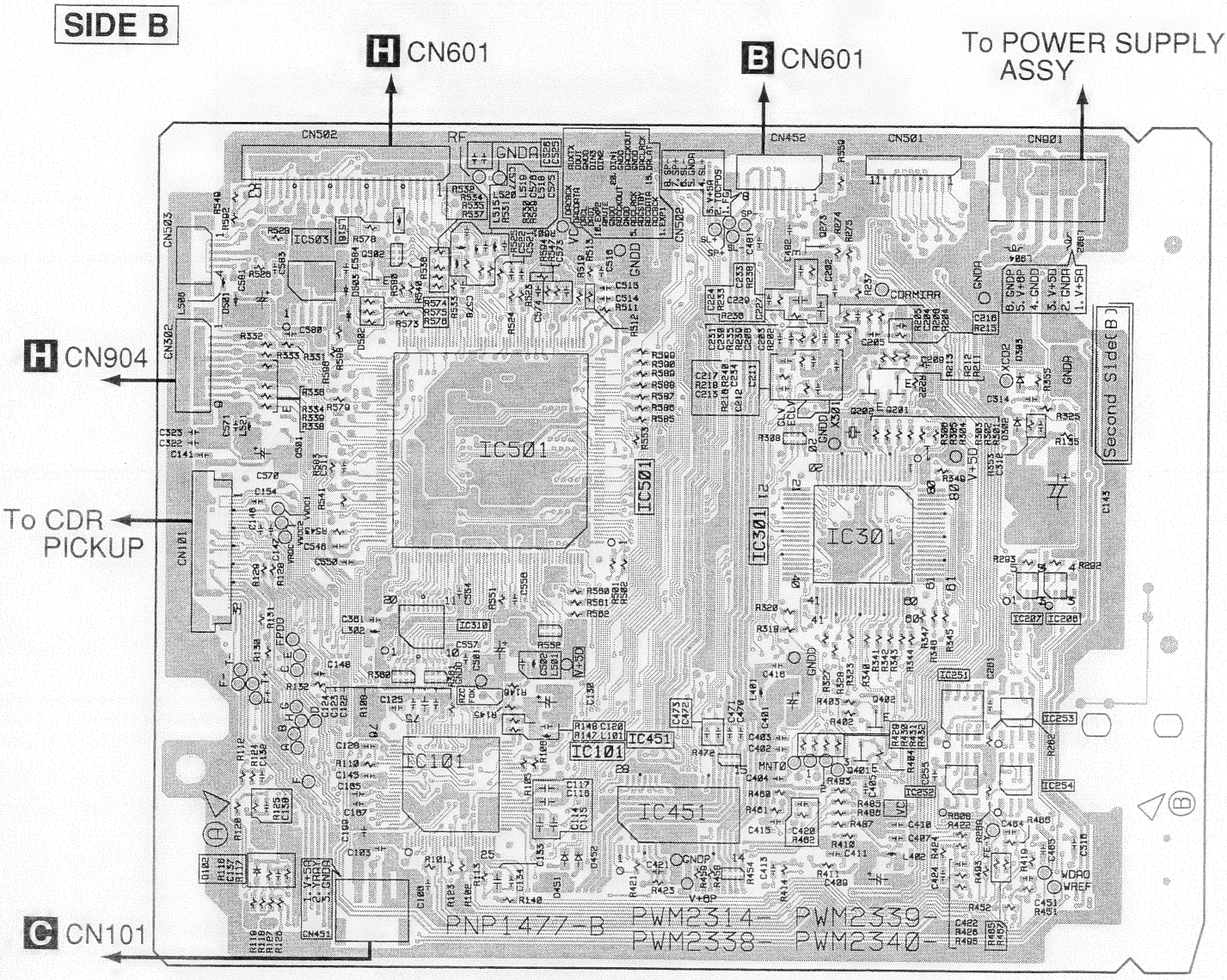

4.4 3CD CORE ASSY

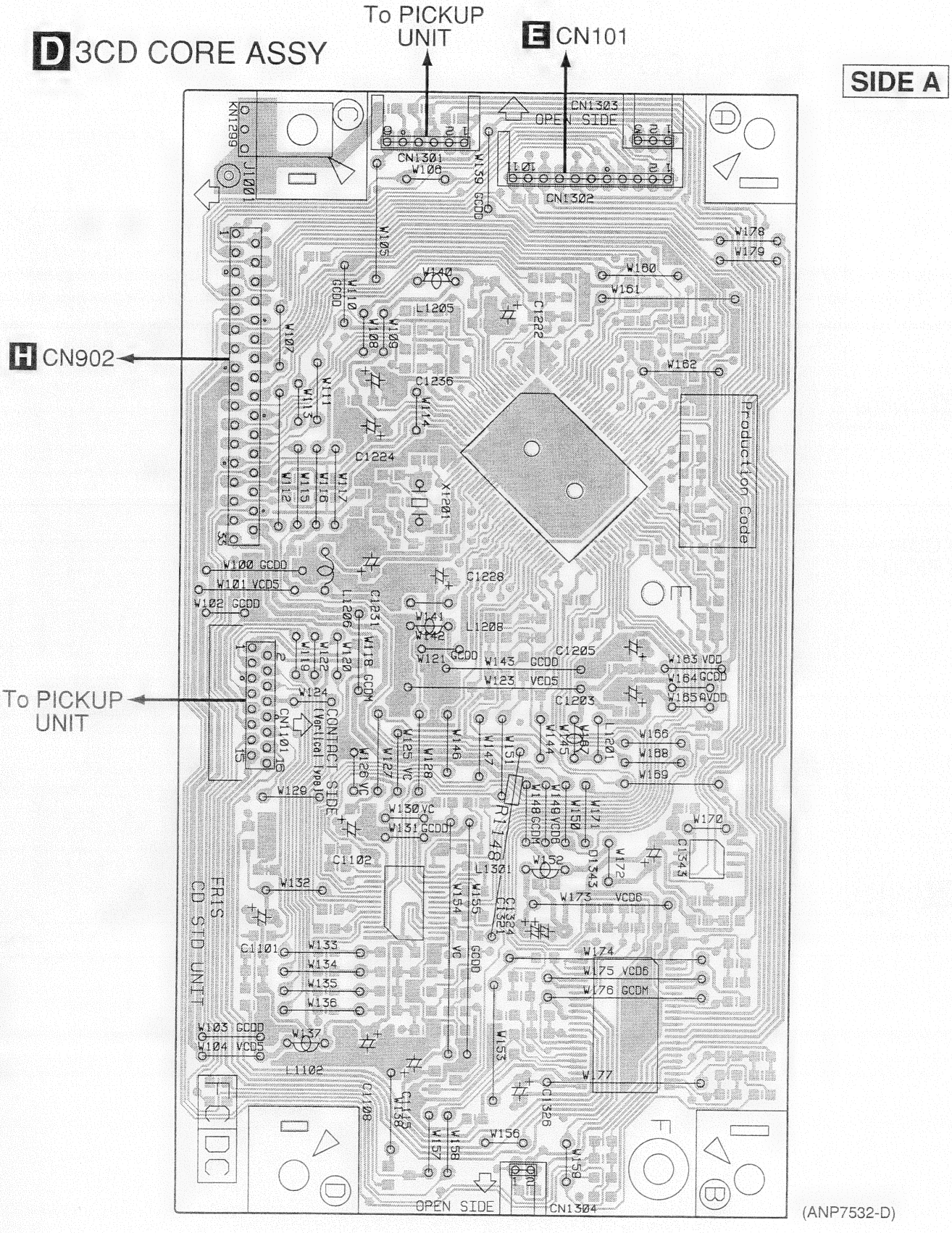

D 3CD CORE ASSY

SIDE B

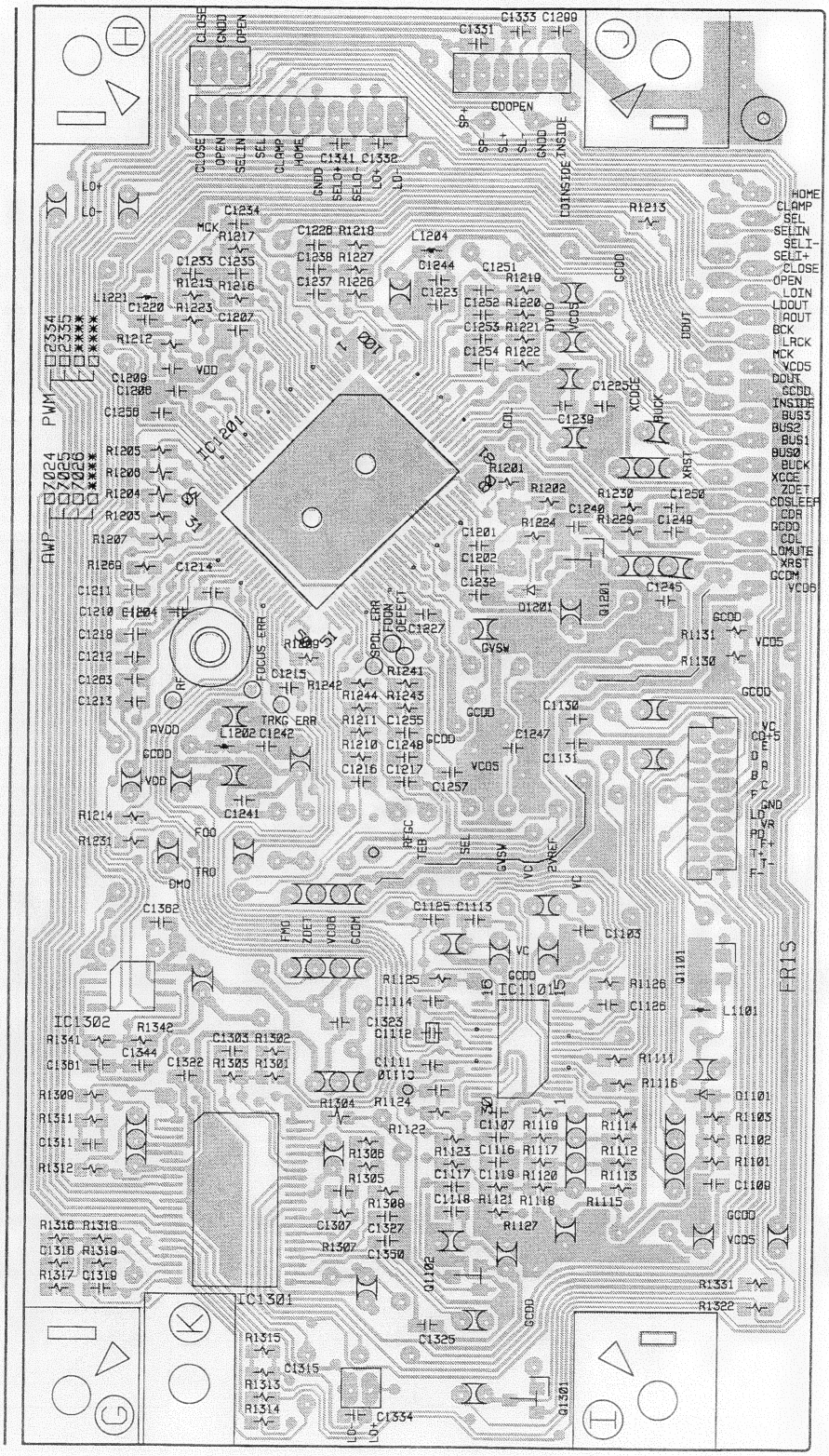

4.5 MAIN ASSY

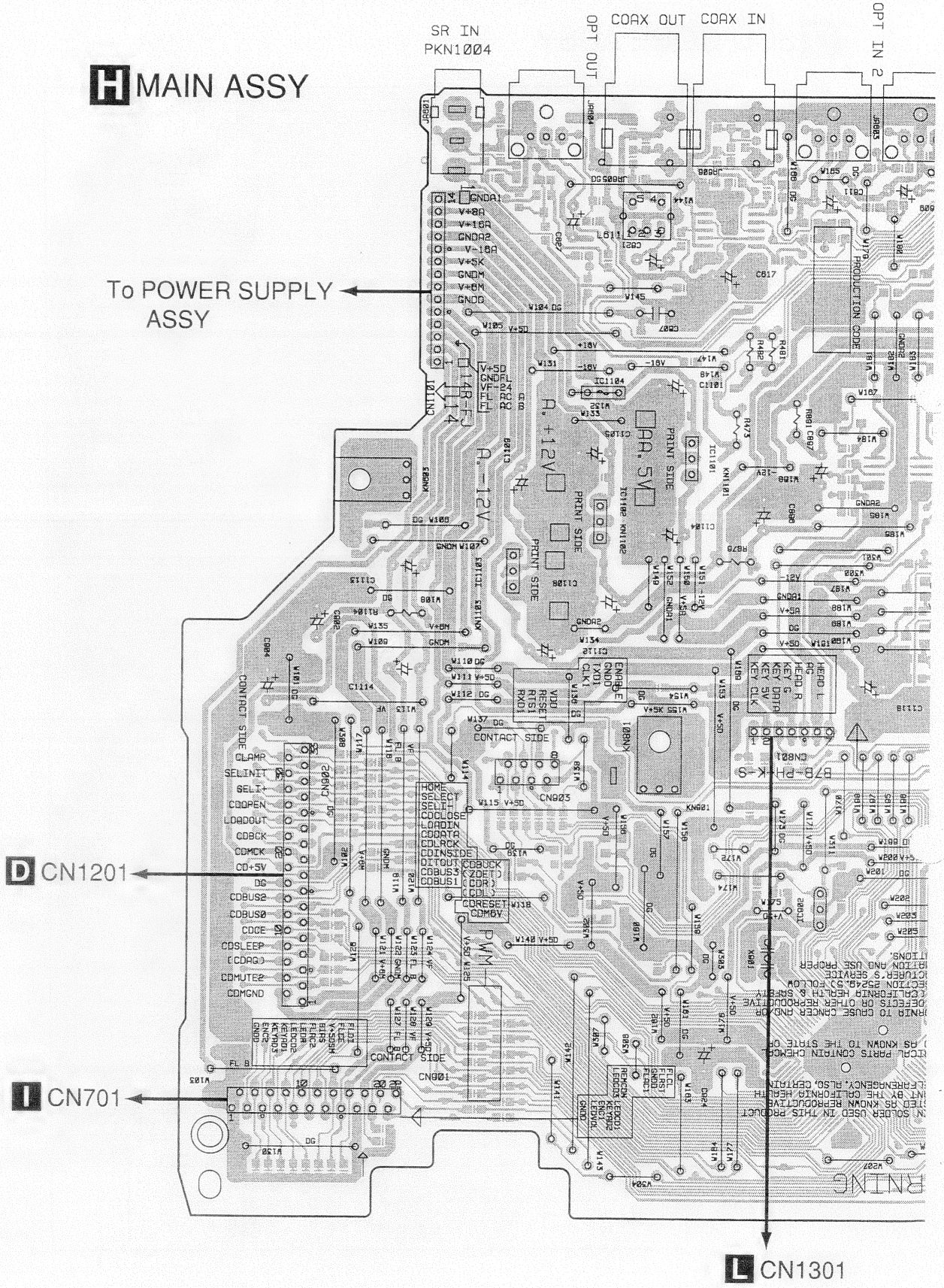
H MAIN ASSY
SR IN
PKN1004
OPT OUT
COAX OUT
COAX IN
OPT IN 2
To POWER SUPPLY ASSY
D CN1201
I CN701
L CN1301
CN101
CN1101
CN1102
CN1103
CN1104
CN1105
CN1106
CN1107
CN1108
CN1109
CN1110
CN1111
CN1112
CN1113
CN1114
CN1115
CN1116
CN1117
CN1118
CN1119
CN1120
CN1121
CN1122
CN1123
CN1124
CN1125
CN1126
CN1127
CN1128
CN1129
CN1130
CN1131
CN1132
CN1133
CN1134
CN1135
CN1136
CN1137
CN1138
CN1139
CN1140

SIDE A

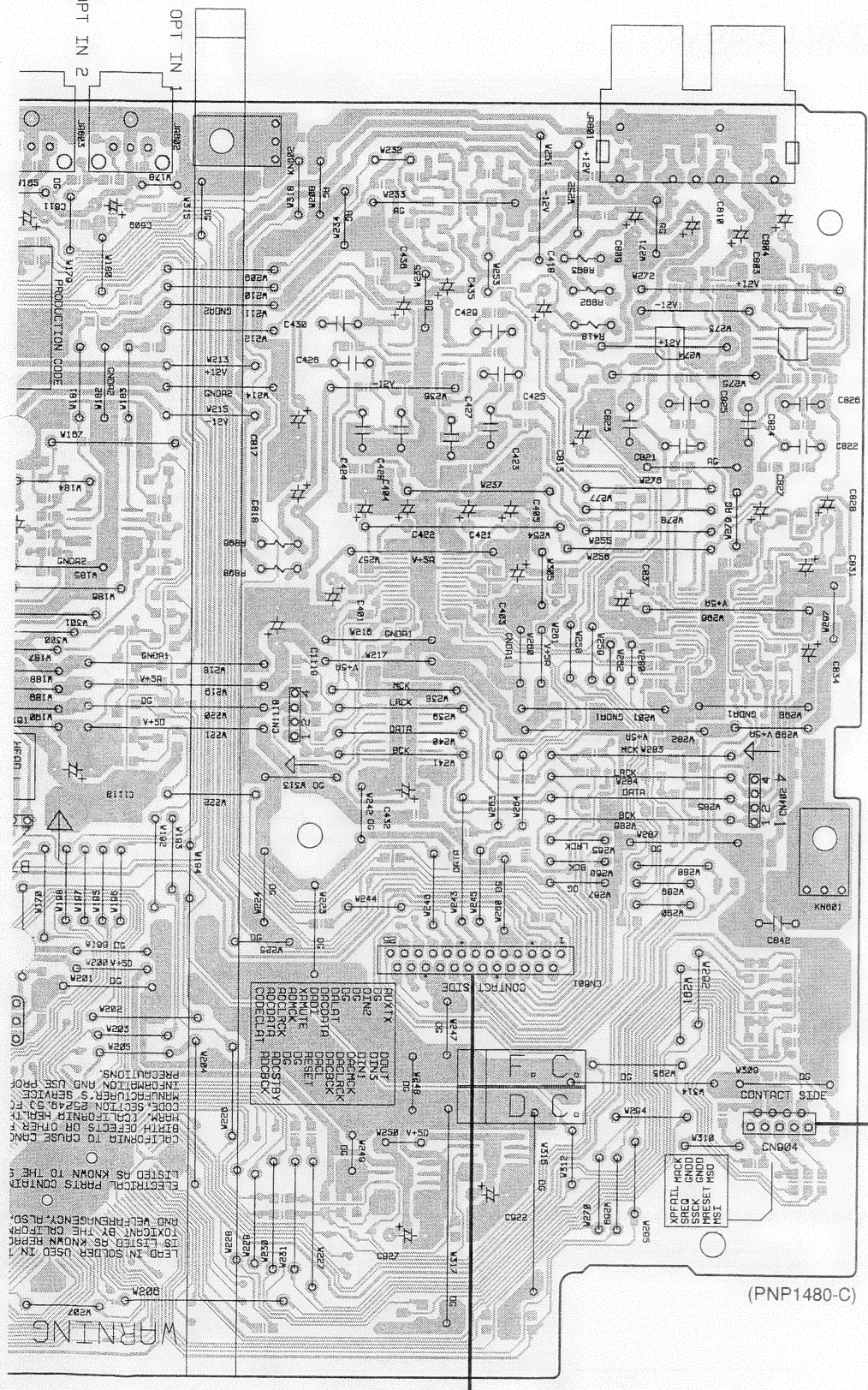

A CN302

A CN502

H MAIN ASSY

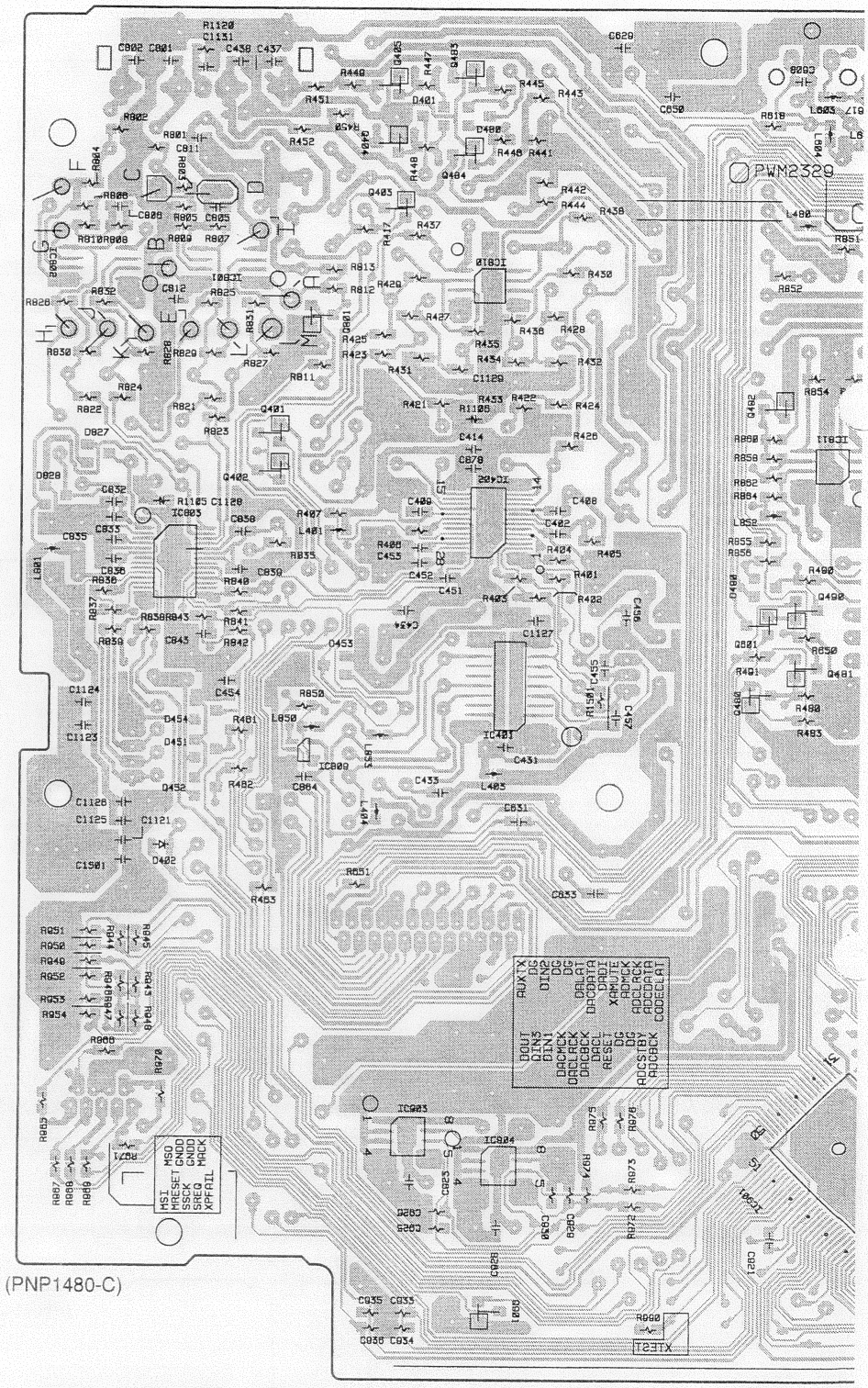

IC802 IC801 Q801
Q401 Q402
IC803
Q405 Q483
Q404 Q484
Q403 IC810
IC402 IC401
IC903 IC904
Q492 IC1811
Q480 Q601 Q490 Q481
IC9(

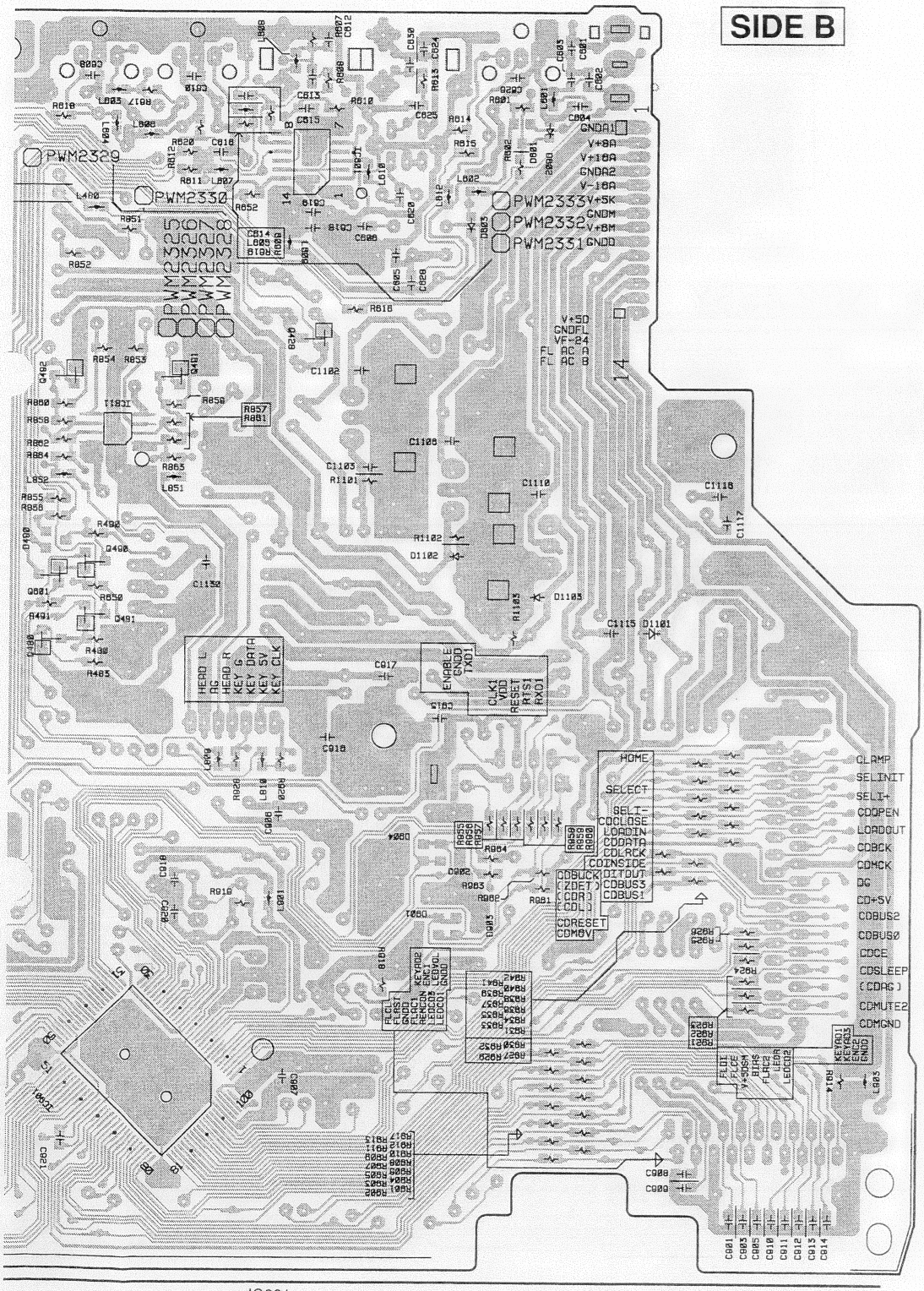

IC601

1492 IC1811 Q401 Q428

1 Q490 Q481

IC901

4.6 HEAD PHONE, OPERATING1, OPERATING2 and OPERATING3 ASSY

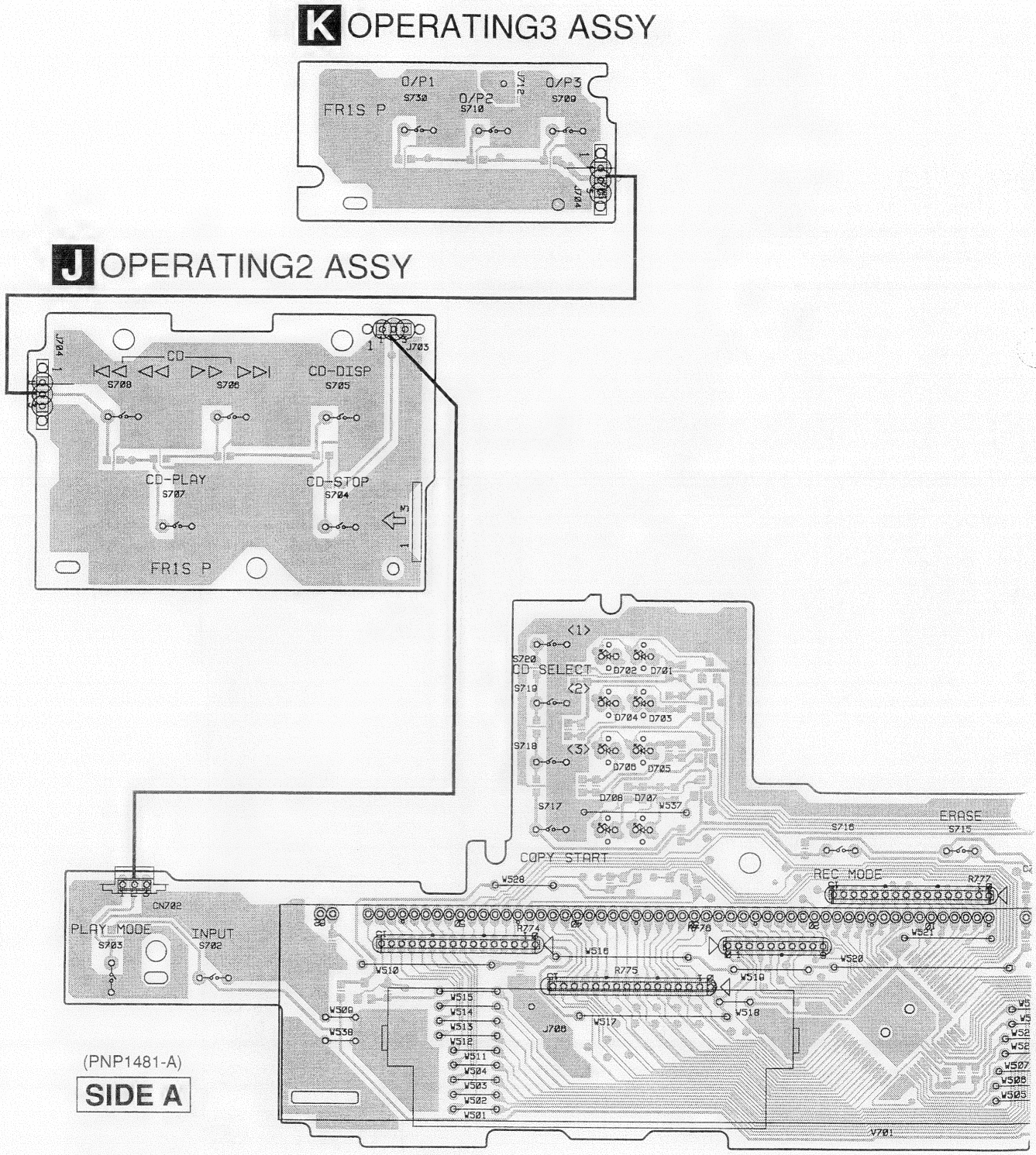

L HEAD PHONE ASSY

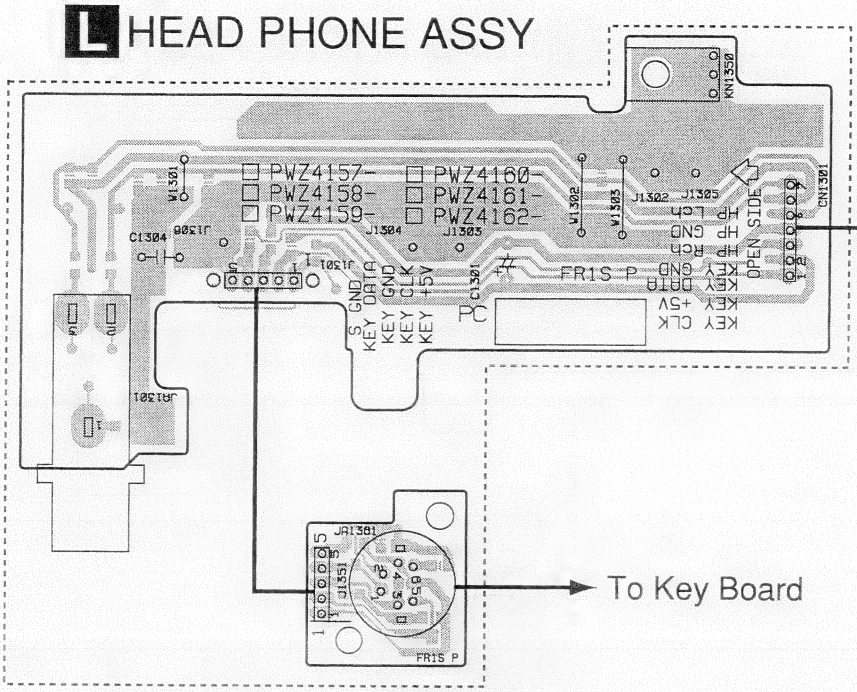

I OPERATING1 ASSY

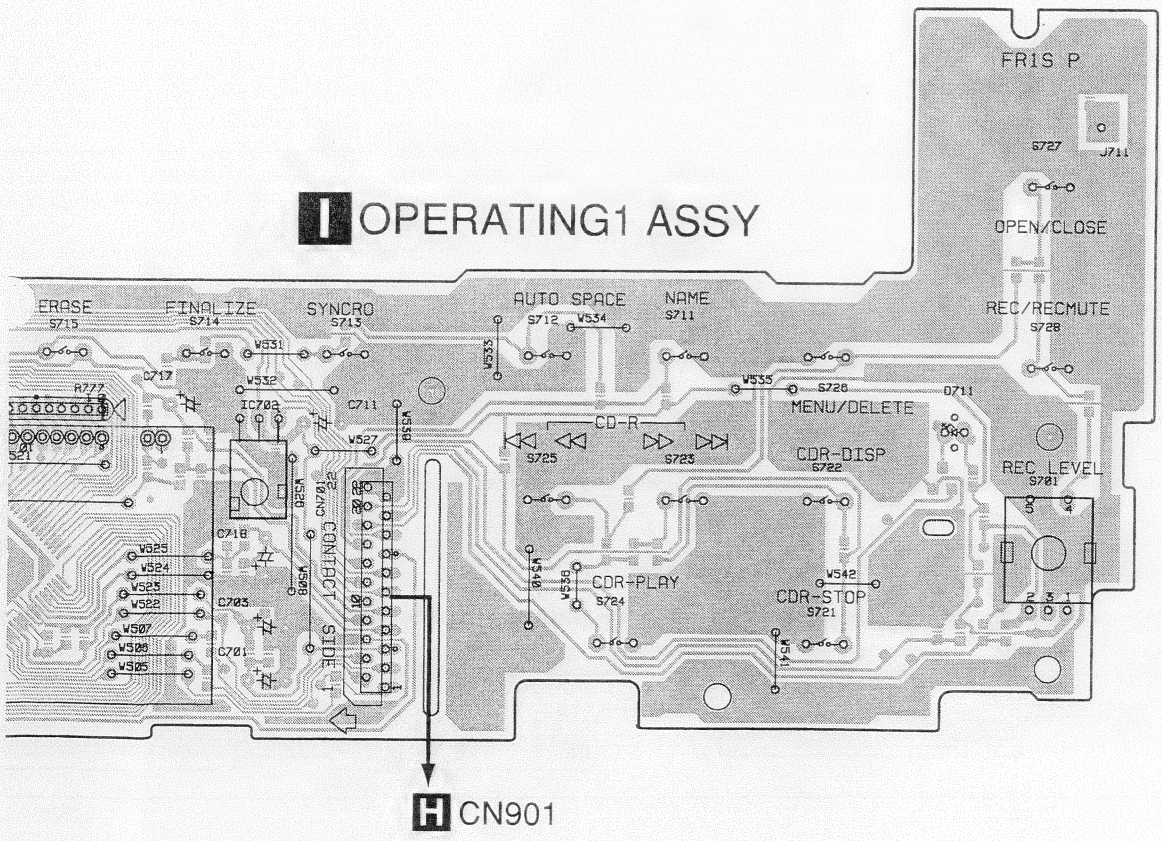

L HEAD PHONE ASSY

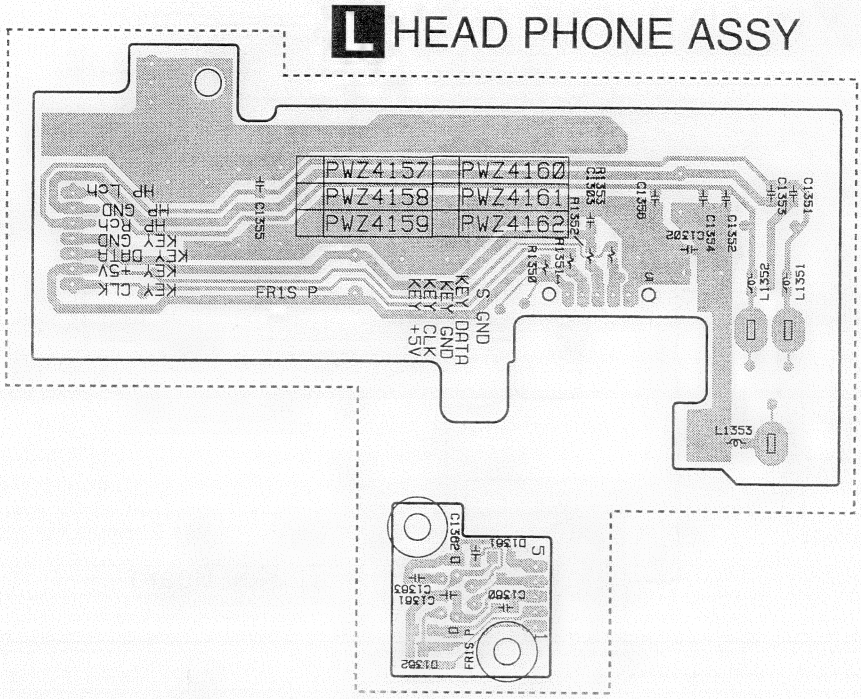

I OPERATING1 ASSY

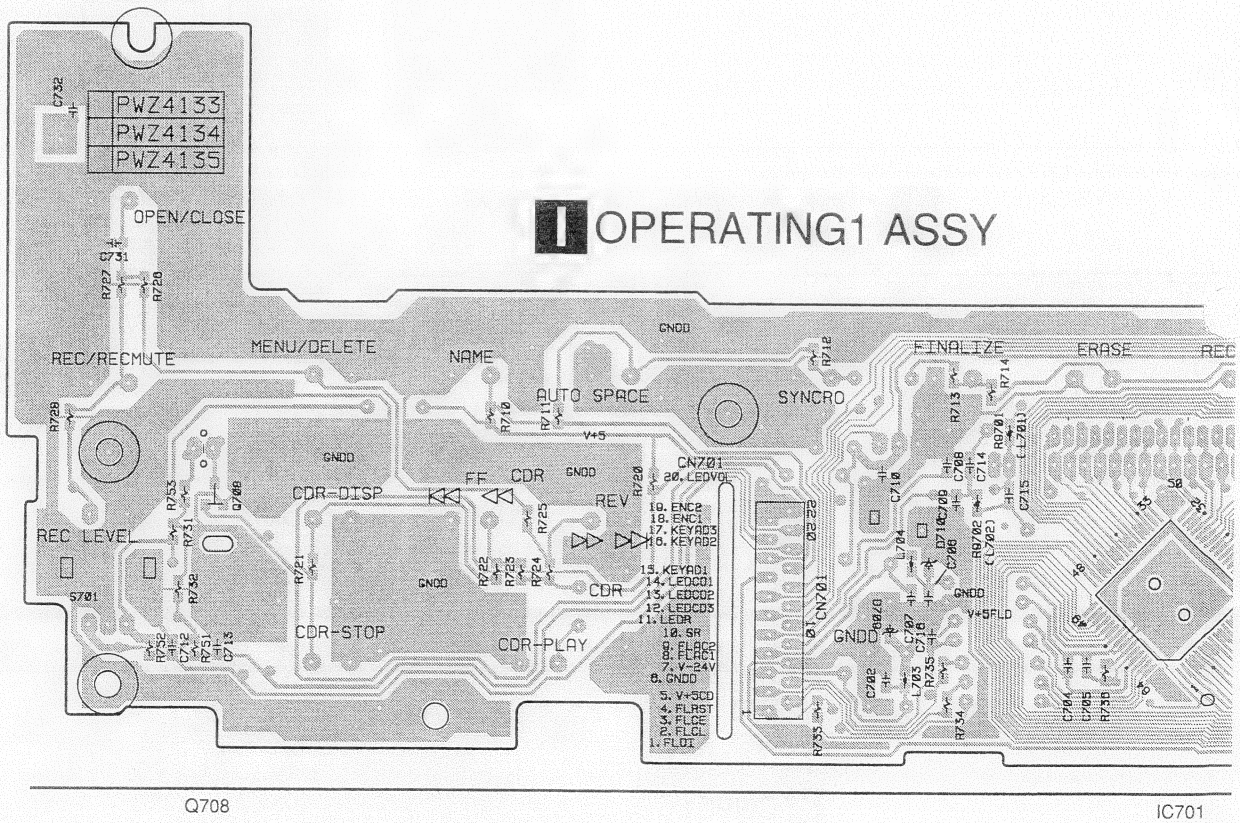

Q708 IC701

K OPERATING3 ASSY

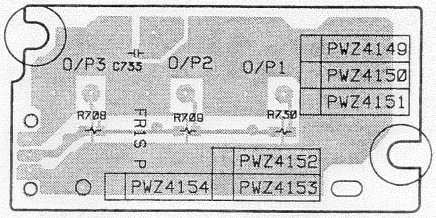

J OPERATING2 ASSY

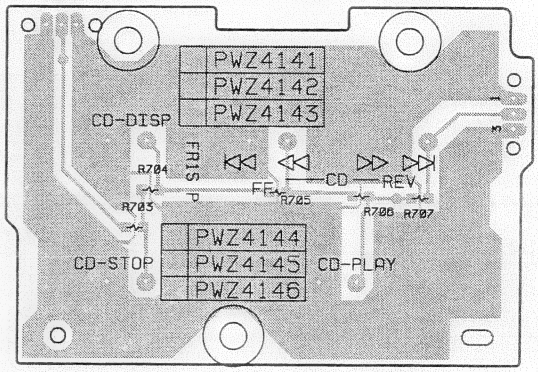

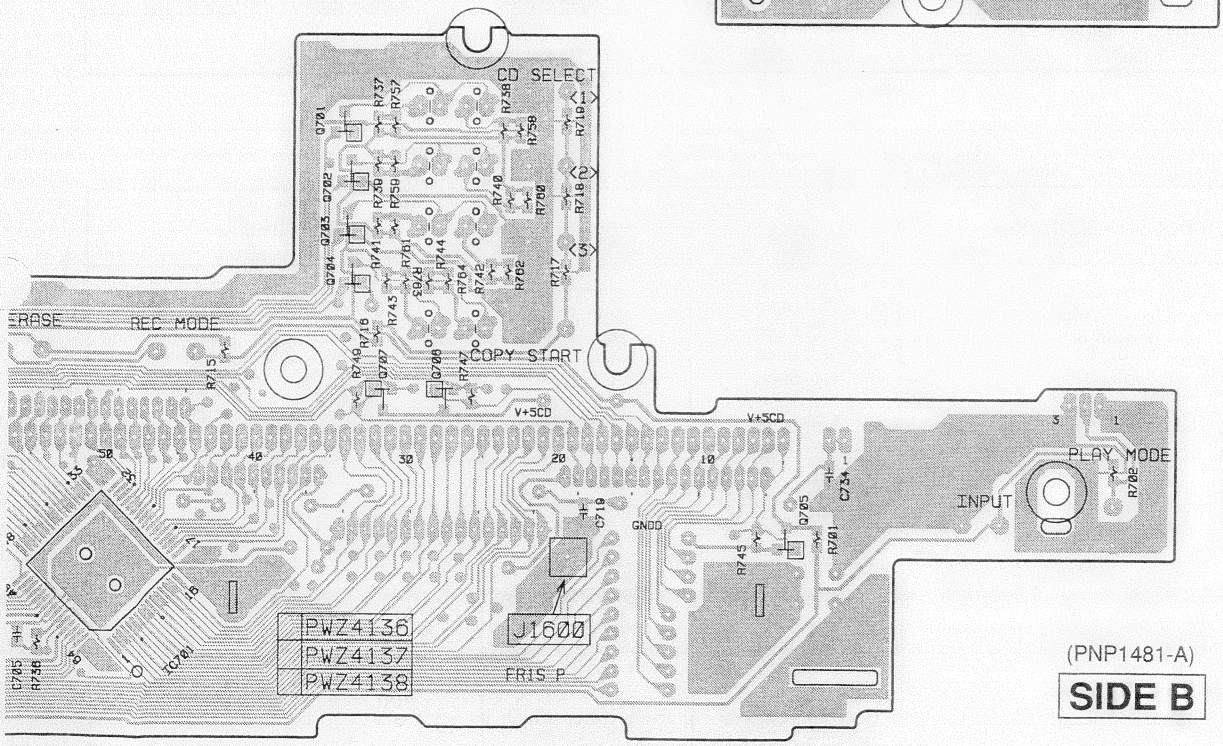

IC701 Q701–Q704 Q705
Q707 Q706

5. PCB PARTS LIST

NOTES: ●*Parts marked by "NSP" are generally unavailable because they are not in our Master Spare Parts List.*
●*The ⚠ mark found on some component parts indicates the importance of the safety factor of the part. Therefore, when replacing, be sure to use parts of identical designation.*
●*When ordering resistors, first convert resistance values into code form as shown in the following examples.*
Ex.1 When there are 2 effective digits (any digit apart from 0), such as 560 ohm and 47k ohm (tolerance is shown by J=5%, and K=10%).

560 Ω	→	*56 × 10¹*	→	*561* ..... *RD1/4PU [5][6][1] J*
47k Ω	→	*47 × 10³*	→	*473* ..... *RD1/4PU [4][7][3] J*
0.5 Ω	→	*R50*		..... *RN2H [R][5][0] K*
1 Ω	→	*1R0*		..... *RS1P [1][R][0] K*

Ex.2 When there are 3 effective digits (such as in high precision metal film resistors).

5.62k Ω	→	*562 × 10¹*	→	*5621* ..... *RN1/4PC [5][6][2][1] F*

■ CONTRAST OF PCB ASSEMBLIES

Mark	Symbol and Description	Part No.			Remarks
		PDR-W839 /KUXJ/CA	PDR-W839 /WYXJ	PDR-W839 /WVXJ	
NSP	CD-R CORE (Mechanism) ASSY	PXA1631	PXA1631	PXA1631	
	├ CDR CORE ASSY	PYY1286	PYY1286	PYY1286	
NSP	├ MECHA PCB ASSY	PWX1625	PWX1625	PWX1625	
NSP	└ LOAB ASSY	VWG2171	VWG2171	VWG2171	
	3CD CORE ASSY	PWM2334	PWM2334	PWM2334	
NSP	3CD ASSY	AWM7473	AWM7473	AWM7473	
	├ MOTOR UNIT	AWU7431	AWU7431	AWU7431	
	├ LOADING UNIT	AWU7432	AWU7432	AWU7432	
	└ SELECT UNIT	AWU7433	AWU7433	AWU7433	
	MAIN ASSY	PWM2325	PWM2326	PWM2326	
NSP	SUB ASSY	PWX1636	PWX1637	PWX1637	
	├ OPERATING1 ASSY	PWZ4133	PWZ4134	PWZ4134	
	├ OPERATING2 ASSY	PWZ4141*1	PWZ4142*1	PWZ4142*1	*1 Constructed same.
	├ OPERATING3 ASSY	PWZ4149*2	PWZ4150*2	PWZ4150*2	*2 Constructed same.
	└ HEAD PHONE ASSY	PWZ4157*3	PWZ4158*3	PWZ4158*3	*3 Constructed same.
⚠	POWER SUPPLY UNIT	PWR1029	PWR1029	PWR1029	

H MAIN ASSY

PWM2326 and PWM2325 are constructed the same except for the following:

Mark	Symbol & Description	Part No.		Remarks
		PWM2325	PWM2326	
	IC402	Not used	PE8001	
	D453	Not used	DA204K	
	L401	Not used	OTL1040	
	L809,L810	Not used	DTL1058	
	C404,C405	Not used	CEAT4R7M50	
	C401,C403,C421,C422	Not used	CEAT220M50	
	C423,C424	Not used	CQMBA152J50	
	C425,C426	CQMBA332J50	CQMBA152J50	
	C427,C428	CQMBA471J50	CQMBA152J50	
	C429,C430	CQMBA471J50	Not used	
	C1127	CCSRCH101J50	CKSRYB471K50	
	C402,C408,C409,C878	Not used	CKSRYB104K25	
	C903,C905	CCSRCH220J50	Not used	
	C451,C455,C456	Not used	CCSRCH101J50	
	R433,R434	RN1/16SE1800D	RN1/16SE1801D	
	R429,R430	RN1/16SE1800D	RN1/16SE1002D	
	R437,R438	RN1/16SE5601D	RS1/16S0R0J	
	R431,R432	RN1/16SE5601D	Not used	
	R435,R436	Not used	RN1/16SE1002D	
	R405	Not used	RS1/10S100J	
	R423,R424	RS1/16S0R0J	RS1/16S102J	
	R9401,R9809,R9810	RS1/16S0R0J	Not used	
	R406,R1501,R9853	Not used	RS1/16S0R0J	
	R401-R404	Not used	RS1/16S101J	
	R965,R968	RS1/16S221J	RS1/16S0R0J	

Mark	Symbol & Description	Part No.		Remarks
		PWM2325	PWM2326	
	R966,R967,R969-R971	RS1/16S221J	RS1/16S101J	
	R427,R428	RS1/16S472J	RS1/16S182J	
	R425,R426	RS1/16S472J	Not used	
	R945	Not used	RS1/16S103J	
	R951	RS1/16S103J	Not used	
	R421,R422	Not used	RS1/16S223J	

I OPERATING1 ASSY

PWZ4134 and PWZ4133 are constructed the same except for the following:

Mark	Symbol & Description	Part No.		Remarks
		PWZ4133	PWZ4134	
	D701-D706	SLR-343DC	SLR-343MC	
	C734	CCSRCH470J50	Not used	
	R737-R742,R757-R762	RS1/16S431J	RS1/16S241J	

Mark	No.	Description	Part No.

A CDR CORE ASSY

SEMICONDUCTORS

	IC101	AK8567
	IC252-IC254,IC421	BA4510F
	IC451	BA5810FP
	IC303	BR93LC66F
	IC401	CXD2585Q
	IC255	HD74HC4053FP
	IC310	HD74HC573T
	IC502	LC324265AT-25
	IC102,IC103,IC304	LM358M
	IC309	LP2980IM5-4.5
	IC161	MM1385AN
	IC302	MM1522XU
	IC251	NJU7016M
	IC201	PA9007A
	IC504	PCX1027
	IC501	PDC069A
	IC301	PE5190B
	IC503	PQ20WZ51
	IC931	PST9245
	IC307	TC7S00F
	IC506	TC7S02F
	IC308	TC7S14F
	IC507	TC7WU04F
	Q451,Q452	2SK208
	Q204,Q205,Q401,Q402	DTA124EK
	Q501	DTA143EK
	Q101,Q201,Q203	DTC114TK
	Q502	DTC124EK
	D104,D201,D303,D451,D452	1SS355
	D105,D202,D251	DA204K
	D252	MA704
	D161,D162,D501-D503	RB521S-30

COILS AND FILTERS

	X301 (32MHz)	PSS1024
	X501 (33.8688MHz)	PSS1025
	L101,L1579,L302-L304	QTL1013
	L401,L402,L501-L503	QTL1013
	L507,L508,L511,L513,L514	QTL1013
	L517,L521,L522	QTL1013
	L509,L510,L515,L516	VTL1077
	L518-L520	VTL1077

CAPACITORS

	C901 (56µF/10V)	ACH7109
	C129	CCSRCH100D50
	C139,C304,C307-C309,C320	CCSRCH101J50
	C104,C105	CCSRCH121J50
	C574	CCSRCH220J50
	C406,C420	CCSRCH221J50
	C106,C119,C404	CCSRCH331J50
	C128,C263,C352	CCSRCH470J50
	C213,C256,C474,C475,C511	CCSRCH471J50
	C517,C518	CCSRCH5R0C50
	C902	CEV101M6R3
	C144,C151,C163,C201,C253	CEV220M6R3
	C325,C501,C503,C505,C519	CEV220M6R3
	C531,C537,C539,C549,C570	CEV220M6R3
	C581,C582	CEV220M6R3
	C281	CEV2R2M50
	C101,C127,C130,C401,C409	CEV470M6R3
	C452	CEV470M6R3
	C108,C232,C258,C543	CKSQYB105K10
	C114-C117,C123,C133,C215	CKSQYB334K16
	C227-C229	CKSQYB334K16
	C426	CKSQYB474K16
	C141,C207,C233,C252,C257	CKSRYB102K50
	C322,C403,C407,C525,C932	CKSRYB102K50
	C121,C137,C140,C161,C162	CKSRYB103K50
	C226,C230,C231,C251,C412	CKSRYB103K50
	C425,C454-C459,C470-C473	CKSRYB103K50
	C515,C546,C557,C572,C583	CKSRYB103K50
	C136,C198,C209,C224,C225	CKSRYB104K16
	C303,C305,C306,C310,C314	CKSRYB104K16
	C421,C514,C516,C521,C522	CKSRYB104K16
	C547,C548	CKSRYB104K16
	C208,C414	CKSRYB152K50
	C122	CKSRYB222K50
	C138,C259	CKSRYB223K50

Mark	No.	Description	Part No.
	C212,C451		CKSRYB272K50
	C113,C205		CKSRYB333K16
	C480,C481		CKSRYB471K50
	C124		CKSRYB472K50
	C102,C206,C413		CKSRYB473K16
	C132		CKSRYB563K16
	C204,C408,C468,C469		CKSRYB681K50
	C125,C463,C464		CKSRYB682K50
	C416,C905		CKSRYF103Z50
	C107,C111,C120,C126,C131		CKSRYF473Z25
	C135,C142,C145,C164,C199		CKSRYF473Z25
	C202,C211,C214,C217		CKSRYF473Z25
	C254,C255,C260-C262,C313		CKSRYF473Z25
	C315-C319,C321,C324,C351		CKSRYF473Z25
	C361,C402,C405,C410,C411		CKSRYF473Z25
	C415,C453,C465,C482,C502		CKSRYF473Z25
	C504,C506,C508-C510		CKSRYF473Z25
	C512,C513,C520,C524		CKSRYF473Z25
	C527,C528,C530,C532-C536		CKSRYF473Z25
	C538,C540-C542,C545,C550		CKSRYF473Z25
	C552,C554,C556,C558,C571		CKSRYF473Z25
	C584,C904,C931		CKSRYF473Z25
	C585 (0.22F/3.5V)		PCH1145
	C143 (0.1F/5.5V)		PCH1146
RESISTORS			
	R454,R472 (10Ω)		ACN7041
	R307,R308,R360,R361 (22kΩ)		ACN7073
	R536,R552 (100kΩ)		ACN7081
	R321,R322,R503,R507-R510 (100Ω)		DCN1092
	R556 (100Ω)		DCN1092
	R1901-R1904,R901-R905		RS1/10S0R0J
	R116,R468,R470,R476,R478		RS1/16S1002F
	R114		RS1/16S1302F
	R115		RS1/16S1502F
	R465,R467		RS1/16S1603F
	R596		RS1/16S2001F
	R118,R119,R477,R479		RS1/16S2002F
	R464,R466		RS1/16S2202F
	R102		RS1/16S4701F
	R126		RS1/16S4703F
	R598		RS1/16S5100F
	R469,R471		RS1/16S9102F
	Other Resistors		RS1/16S□□□J
OTHERS			
	CN101	32P FFC Connector	PKN1024
	CN453	PH Connector	S2B-PH-SM3
	CN451	PH Connector	S3B-PH-SM3
	CN901	PH Connector	S6B-PH-SM3
	CN102	PH Connector	S8B-PH-SM3
	CN452	8P FFC Connecor	VKN1300
	CN302	9P FFC Connecor	VKN1301
	CN502	25P FFC Connecor	VKN1317
	KN901	Earth Plate	VNF1109

B MECHA PCB ASSY

SEMICONDUCTORS

PC651		NJL5809K-F1

SWITCHES AND RELAYS

S601		PSG1014

Mark	No.	Description	Part No.
RESISTORS			
	Other Resistors		RD1/4PU□□□J
OTHERS			
	J601	3P Jumper Wire	D20PWW0305E

C LOAB ASSY

OTHERS

	CN101	KR Connector	S3B-PH-K-S
	101	Reaf Switch	VSK1011

D 3CD CORE ASSY

SEMICONDUCTORS

IC1302		BA6417F
IC1301		M56788FP
IC1101		TA2150FN
IC1201		TC9495F
Q1101		2SA1036K
Q1201		DTA124EK
Q1102		DTC114TK
Q1301		DTC124EK
D1201		1SS355

COILS AND FILTERS

L1206,L1301		LFEA100J
X1201	(16.9344MHz)	PSS1008

CAPACITORS

C1119,C1125		CCSQCH101J50
C1307		CCSQCH121J50
C1201,C1202		CCSQCH150J50
C1209		CCSQCH220J50
C1117,C1118		CCSQCH330J50
C1210,C1303		CCSQCH470J50
C1263		CCSQCH471J50
C1126		CCSQCH820J50
C1116		CCSQCK2R0C50
C1324		CEAT221M10
C1343		CEJQ101M10
C1101,C1102,C1108,C1115,C1203		CEJQ101M6R3
C1205,C1222,C1224,C1228,C1231		CEJQ101M6R3
C1236		CEJQ101M6R3
C1249,C1250		CKSQYB102K50
C1103,C1107,C1114,C1130,C1204		CKSQYB103K50
C1206,C1207,C1212,C1214,C1223		CKSQYB103K50
C1225-C1227,C1232,C1239,C1245		CKSQYB103K50
C1110,C1111,C1322,C1325,C1350		CKSQYB104K16
C1104,C1131		CKSQYB104K25
C1211		CKSQYB153K25
C1213		CKSQYB222K50
C1112,C1113		CKSQYB224K16
C1215		CKSQYB333K50
C1237		CKSQYB471K50
C1216,C1217		CKSQYB473K16
C1311,C1319		CKSQYB682K50

RESISTORS

R1148	RD1/4PM124J
R1318	RS1/10S1202F
R1319	RS1/10S2202F

Mark	No.	Description	Part No.
	R1317		RS1/10S2702F
	Other Resistors		RS1/10S□□□J

OTHERS

	CN1201	33P FFC Connector	9607S-33F
	CN1301	KR Connector	S6B-PH-K-S
	CN1101	FFC Connector	SLW16R-1C7

E MOTOR UNIT

SWITCHES AND RELAYS

	S106	DSG1016

OTHERS

	6P Cable Holder	51048-0600

F LOADING UNIT

SWITCHES AND RELAYS

	S104,S105	ASG7018

OTHERS

	4P Cable Holder	51048-0400
	6P Cable Holder	51048-0600
J101	4P Jumper Wire	D20PDD0420E
J102	6P Jumper Wire	D20PDD0615E

G SELECT UNIT

SWITCHES AND RELAYS

	S102	ASG7019
	S101	ASG7022
	S103	DSG1016

OTHERS

	4P Cable Holder	51048-0400

H MAIN ASSY

SEMICONDUCTORS

	IC803	AK4524VF
	IC903,IC904	BR24C64F
	IC811	M5218AFP
	IC801,IC802	NJM2121M
	IC810	NJM4558MD
⚠	IC1101	NJM7805FA
⚠	IC1102	NJM7812FA
⚠	IC1103	NJM7912FA
	IC901	PD5603A
	IC601	TC74HCU04AF
	IC809	TC7SU04F
	Q801	2SC2412K
	Q404,Q405,Q483,Q484	2SD2114K
	Q491,Q492	2SD2114K
	Q601	DTA114TK
	Q402,Q481,Q490	DTA124EK
	Q401,Q403,Q428,Q480,Q901	DTC124EK
	D402,D602,D603	1SS355
	D451,D452,D454,D827,D828	DA204K
	D902,D903	DAN202K
	D401,D480,D490,D601,D901	DAP202K

Mark	No.	Description	Part No.
	D904		DAP202K
	D1102,D1103		RB501V-40

COILS AND FILTERS

	X901	ASS7020
	L601,L602,L610,L809,L810	DTL1058
	L404,L480,L606,L607,L609	OTL1040
	L801,L850,L901	OTL1040
	L611	PTL1003

CAPACITORS

	C1126,C1501,C437,C438	CCSRCH101J50
	C452-C456,C629,C908-C914	CCSRCH101J50
	C917	CCSRCH101J50
	C805,C806	CCSRCH121J50
	C615	CCSRCH470J50
	C627,C922,C924,C927	CEAT101M10
	C1101,C1105,C1109	CEAT101M25
	C435,C436,C803,C804	CEAT220M50
	C827,C828	CEAT220M50
	C831,C834,C837	CEAT221M10
	C809,C810,C817,C818	CEAT221M16
	C896,C897	CEAT221M16
	C611,C617	CEAT221M6R3
	C621	CEAT330M25
	C813	CEAT330M35
	C1108,C1112	CEAT471M16
	C1104	CEAT471M6R3
	C1124,C612,C915	CKSRYB102K50
	C1102,C1106,C1110,C1116,C1121	CKSRYB103K50
	C433,C434,C613,C620,C918	CKSRYB103K50
	C923,C928	CKSRYB103K50
	C601,C610,C618,C626,C633	CKSRYB104K25
	C833,C835,C836,C838,C839	CKSRYB104K25
	C843,C864,C907,C921	CKSRYB104K25
	C1127,C624,C630	CKSRYB471K50
	C1117	CKSRYF473Z50
	C821,C822	CQMBA102J50
	C425,C426	CQMBA332J50
	C427-C430,C823-C826	CQMBA471J50

RESISTORS

	R876,R891-R893,R896,R898	RD1/2VM101J
	R418	RD1/2VM182J
	R481,R482	RD1/2VM562J
	R483	RD1/4PU103J
	R807-R810	RN1/16SE1002D
	R803,R804	RN1/16SE1202D
	R429,R430,R433,R434	RN1/16SE1800D
	R825-R828	RN1/16SE2201D
	R829-R832	RN1/16SE3301D
	R431,R432,R437,R438	RN1/16SE5601D
	R863,R864	RS1/10S470J
	R835	RS1/10S5R6J
	R1103	RS1/10S222J
	Other Resistors	RS1/16S□□□J

OTHERS

CN1101	FJ Connector 14P	14R-FJ
CN903	8P FFC Connector	9604S-08C
CN901	22P FFC Connector	9604S-22C
CN902	33P FFC Connector	9604S-33C
CN801	KR Connector	B7B-PH-K-S

Mark	No.	Description	Part No.
	JA603	Optical Link In	GP1FA550RZ
	JA604	Optical Link Out	GP1FA550TZ
	JA605	1P Jack	PKB1028
	JA606	1P Jack	PKB1033
	JA601	Remote Control Jack	PKN1004
		PCB Binder	VEF1040
	JA801	4P Pin Jack	VKB1132
	CN904	9P FFC Connector	VKN1240
	CN601	25P FFC Connector	VKN1256
	KN601-KN603,KN901	Earth Plate	VNF1084

I OPERATING1 ASSY

SEMICONDUCTORS

IC701		LC75710NE
Q705-Q707		2SC2412K
Q701-Q704,Q708		DTC143EK
D701-D706		SLR-343DC(NPQ)
D707,D708,D711		SLR-343VC(NPQ)

COILS AND FILTERS

L703,L704		OTL1040

SWITCHES AND RELAYS

S701		PSB1009
S702,S703,S711-S728		VSG1009

CAPACITORS

C705		CCSRCH330J50
C703		CEJQ101M10
C719		CKSQYB102K50
C712,C713		CKSRYB103K50
C702,C704,C706,C707,C710		CKSRYF104Z50
C716		CKSRYF104Z50

RESISTORS

R774,R775,R777		RA15T473J
R776		RA9T473J
Other Resistors		RS1/16S□□□J

OTHERS

CN702	3P Jumper Connector	52151-0310
CN701	22P FFC Connector	9604S-22C
	Remote Receiver Unit	GP1U27X
V701	FL Indicator Tube	PEL1102

J OPERATING2 ASSY

SWITCHES AND RELAYS

S704-S708		VSG1009

RESISTORS

Other Resistors		RS1/16S□□□J

OTHERS

	3P Cable Holder	51048-0300
J703	Jumper Wire	D20PYY0305E

K OPERATING3 ASSY

SWITCHES AND RELAYS

S709,S710,S730		VSG1009

Mark	No.	Description	Part No.

RESISTORS

Other Resistors		RS1/16S□□□J

OTHERS

	3P Cable Holder	51048-0300
J705	Jumper Wire	D20PYY0310E

L HEADPHONE ASSY

SEMICONDUCTORS

D1361,D1362		DA204K

COILS AND FILTERS

L1351-L1353		DTL1058

CAPACITORS

C1301		CEAT101M6R3
C1304		CKCYF473Z50
C1355,C1356		CKSRYB103K50
C1302,C1303,C1360-C1363		CKSRYF104Z25

RESISTORS

Other Resistors		RS1/16S□□□J

OTHERS

	5P Cable Holder	51048-0500
CN1301	KR Connector	B7B-PH-K-S
J1301	Jumper Wire	D20PWY0505E
JA1301	Headphone Jack	RKN1002
JA1361	Mini DIN 6P Socket	RKN1038
KN1350	Earth Plate	VNF1084

M POWER SUPPLY UNIT

OTHERS

⚠	FU1	Fuse (2A)	215002
⚠	IC1	IC Protector (1.6A)	49101.6
⚠	IC2	IC Protector (1.6A)	49101.6
⚠	IC3	IC Protector (800mA)	491.800
⚠	IC4	IC Protector (1.6A)	49101.6

6. ADJUSTMENT

DANGER – LASER RADIATION WHEN OPEN.
AVOID DIRECT EXPOSURE TO BEAM.

• 3CD CHECK

NOTE: There is no information to be shown in this 3CD adjustment.

6.1 3CD SLIDER OPERATION CONFIRMATION

(1) Eject the disc ,and when all 3CD tray stay at the home position, turn off the power. (Refer to the right picture)
(2) Move the slider gear so that the slider move to the outer side. (Refer to the right picture.)
(3) Turn on the power and confirm the following ①~⑤ movement.
  ① The pick-up move to the most inner side.
  ② The tray do the clamping movement.
  ③ The pick-up do the spindle-kick movement ,and then do the LD ON and FOCUS ON movement. (3 times)
  ④ Redo the ③ movement once more.
  ⑤ Confirm the FL display that the set detect NO DISC.

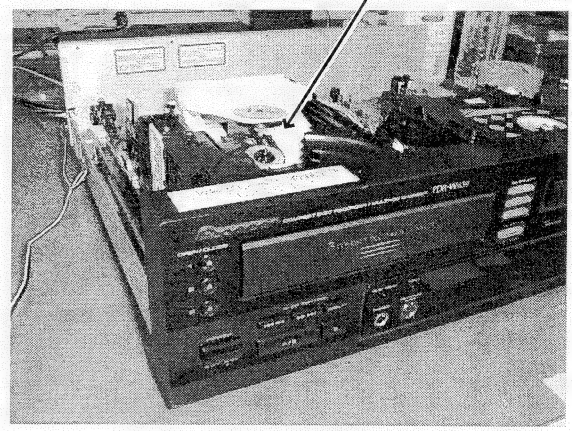

3CD Tray at Home position

6.2 3CD RF OUTPUT AND JITTER LEVEL CONFIRMATION

(1) Set the RW disc to the CD-R side.
(2) Copy from 3CD side to CD-R side at normal and double speed.
(3) Confirm the RF output and jitter level of 3CD side at normal and double speed .

[Standard Value]

(Use STD-903 or STD-905 Test Disc)

	Normal Speed	Double Speed
JITTER	under 25 ns	under 20 ns
RF LEVEL	about 1.2 V_{p-p}	about 1.0 V_{p-p}

■ Check Point

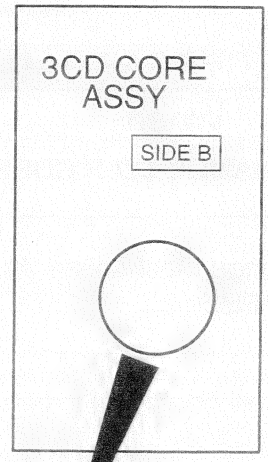

V: 50mV/div., H: 500msec/div.
(play)

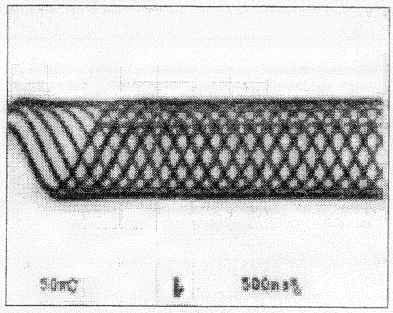

RF Output Waveform
at IC1101 PIN25

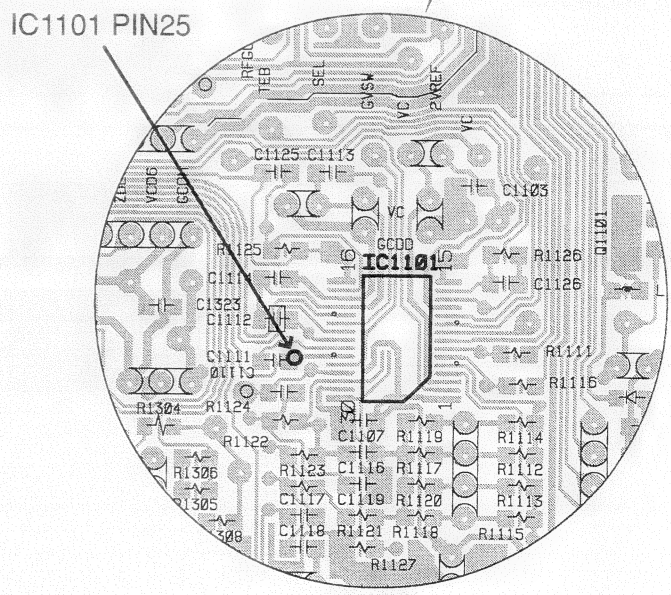

● CD-R ADJUSTMENT

6.3 DISCS TO BE USED

• SERVO SYSTEM ADJUSTMENT

CD: Test disc for adjustment (STD-903) or equivalent
Test disc for inspection (STD-914) or equivalent

6.4 MEASURING INSTRUMENTS

(1) Laser power meter
Following power meter manufactured by Advantest Corporation or equivalent:
TQ8210 + TQ82017
TQ8215 + TQ82021
TQ8215 + TQ82010 + TQ82017
LE8010 (by LEADER)
(2) Oscilloscope
(3) CD Jitter Meter

6.5 NECESSARY ADJUSTMENT POINTS

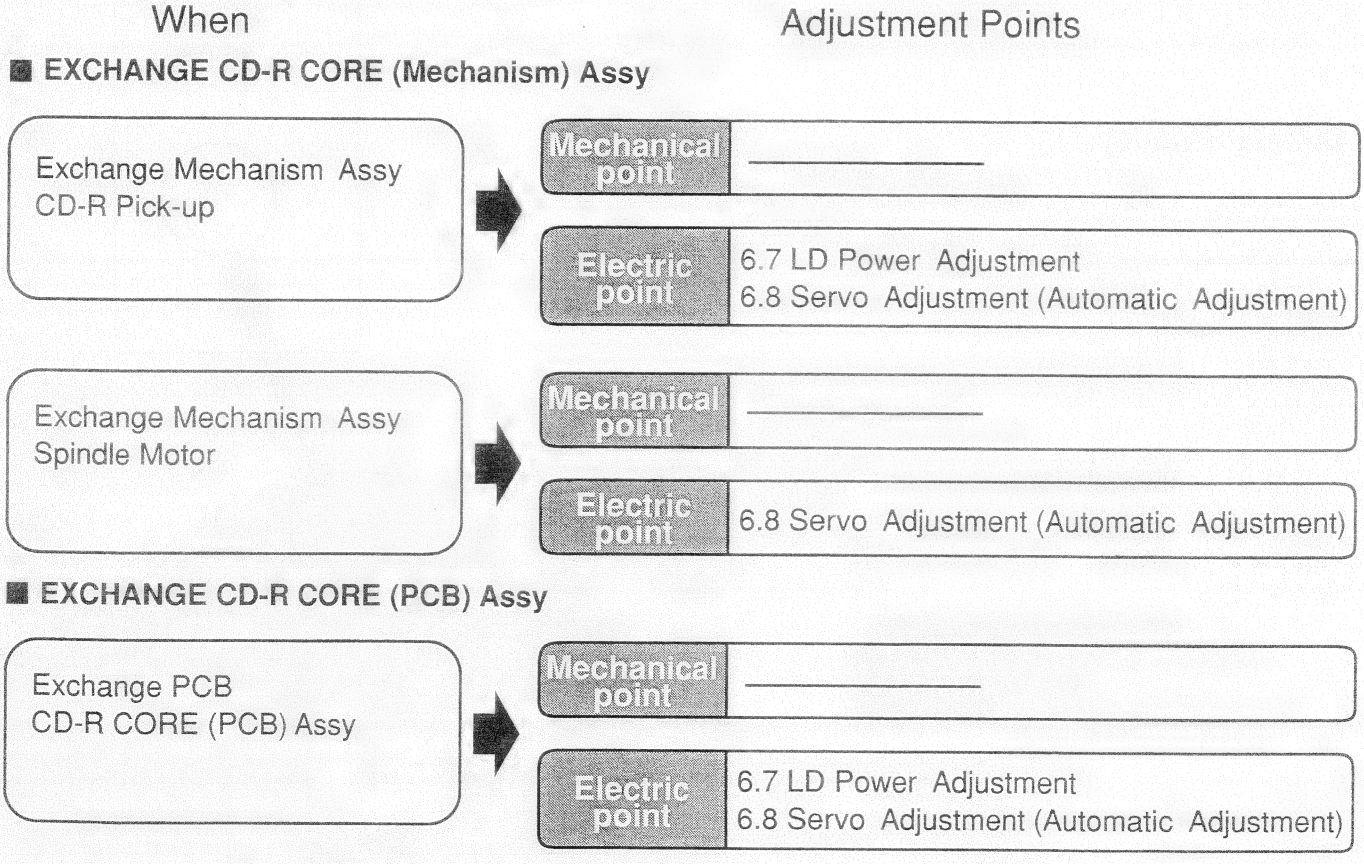

6.6 TEST MODE

6.6.1 How to Enter the Test Mode

TEST MODE : ON

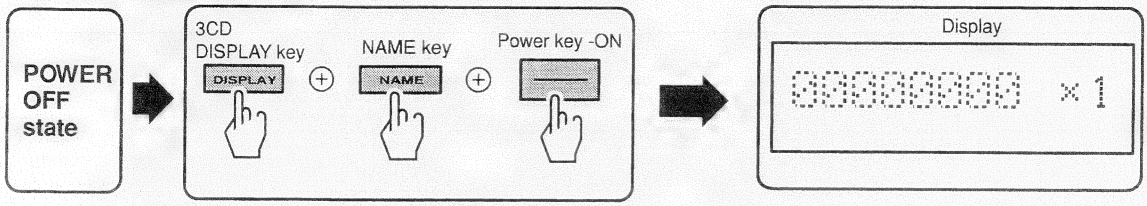

* Pressing both the 3CD DISPLAY key and NAME key,turn ON the POWER.

* Continue pressing both the DISPLAY key and NAME key until the above DISPLAY appears.

TEST MODE : STOP →CANCEL

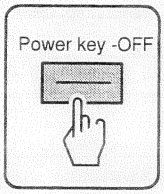

* Turn OFF the POWER and then turn ON the POWER again. The state returnes to the Normal Mode.

6.6.2 Test Point

SIDE A

A CDR CORE ASSY

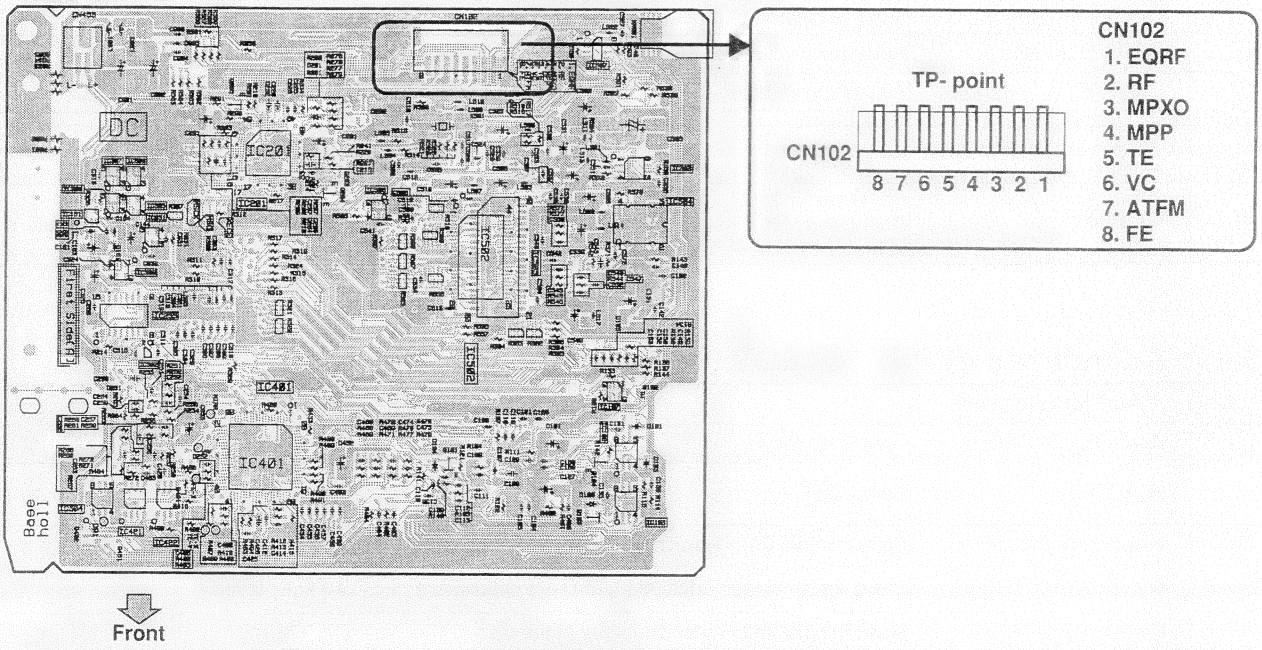

6.6.3 OPERATIONS IN TEST MODE

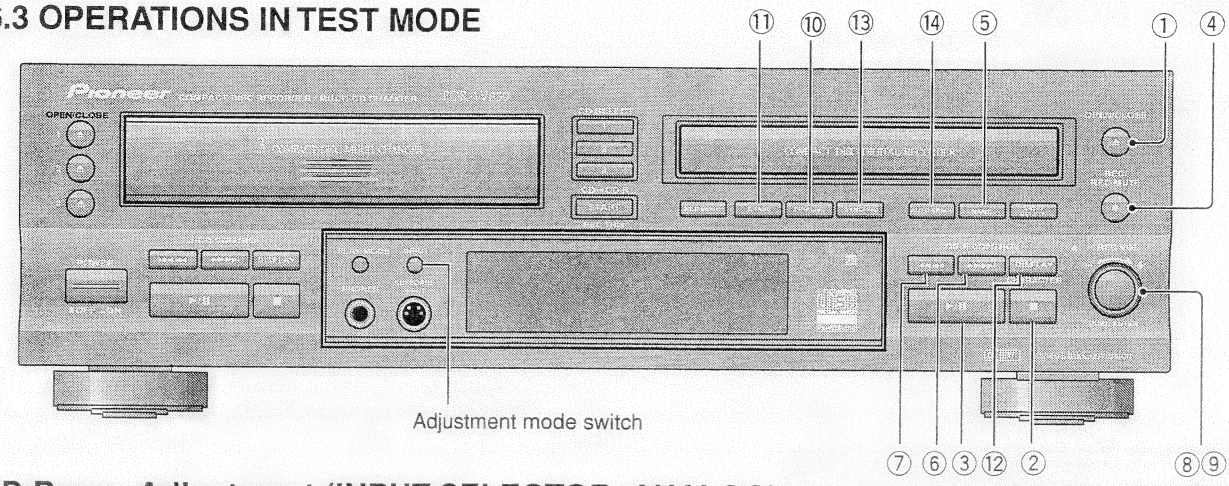

■ LD Power Adjustment (INPUT SELECTOR: ANALOG)

Key No.	Assignment Key	Contents of Movement
①	▲ (OPEN/CLOSE)	Tray Open/Close
②	■ (STOP)	LD power adjustment end Turn off the LD and disc selection set to CD.
③	►/II (PLAY/PAUSE)	Store the power adjustment value to the EEPROM and shift to the next power adjustment.
④	● (REC/REC MUTE)	LD POWER adjustment standby Switch the setting of I◄◄•►►I key during adjustment. (coarse adjustment ⟷ fine adjustment : default is the coarse adjustment)
⑤	NAME	Starts the LD POWER adjustment (from 0) (CD: Playback power, CD-R/RW: Record power)
⑥	►►►►I (F SCAN)	Move the pickup to outer periphery of the disc
⑦	I◄◄◄◄ (R SCAN)	Move the pickup to inner periphery of the disc
⑧	REC VOL(JOG ±)	Adjustment value setting
⑨	ENTER	Adjustment data register
⑩	Not used	Not used
⑪	ERASE	Disc specification switch
⑫	DISPLAY	Adjustment from the adjustment result stored in the EEPROM at adjustment standby. During adjustment, shift to the next power adjustmnet not to store the current power adjustment value in the EEPROM.

■ Servo Adjustment (INPUT SELECTOR: OPTICAL)

Key No.	Assignment Key	Contents of Movement
①	▲ (OPEN/CLOSE)	Tray Open/Close
②	■ (STOP)	Servo OFF
③	►/II (PLAY/PAUSE)	Spindle servo ON, Tracking servo ON/OFF
④	● (REC/REC MUTE)	Starts the automatic adjustment of servo adjustment ("FEOS" is displayed.)
⑥	►►►►I (F SCAN)	Move the pickup to outer periphery of the disc
⑦	I◄◄◄◄ (R SCAN)	Move the pickup to inner periphery of the disc
⑧	REC VOL(JOG ±)	Adjustment value setting
⑨	ENTER	Adjustment data register
⑩	FINALIZE	Focus servo ON
⑪	ERASE	Disc specification switch Continue pressing it more than three seconds and initialize the adjustment data.
⑬	SYNCHRO	Execute the average adjustment
⑭	AUTO SPACE	Servo adjustment mode feed

6.7 LD POWER ADJUSTMENT

DANGER – LASER RADIATION WHEN OPEN.
AVOID DIRECT EXPOSURE TO BEAM.

6.7.1 Playback Power Adjustment

Test Point	Pickup objective lens
Adjustment Value	0.9 mW ± 0.05 mW
Purpose	Optimizing playback power of laser diode.
Symptom when Out of Adjustment	Incapable of disc discrimination, playback, or track searches. Or track skipping.

Adjustment method	FL Indication
[Procedure] 1. Enter the Test mode. 2. Press the INPUT key so that "ANALOG" appears on the FL display. 3. Press the ERASE key so that "CD" appears on the FL display. 4. Move the pickup to the position where the power is easy to measure by pressing the SCAN key. (⏮◀◀◀◀ ▶▶▶▶⏭) 5. Press the REC/REC MUTE and NAME key in order, and light the LD. 6. Turn the JOG key to adjust the power. Switch the coarse adjustment and the fine adjustment by pressing the REC/REC MUTE key, and adjust it. (initial state is the coarse adjustment.) 7. Press the ENTER key to register the adjustment if the power became the adjustment value. 8. Press the STOP key to goes out the LD, and adjustment is completed.	『00000000___x1』 『PLAY_____*00___』 『00000000___x1』

DANGER – LASER RADIATION WHEN OPEN.
AVOID DIRECT EXPOSURE TO BEAM.

6.7.2 CD-R Record Power Adjustment

Test Point	Pickup objective lens
Adjustment Value	R REC : 4.3 mW ± 0.1 mW (=A value) ; R Over Drive : A value + 0.1mW ± 0.01 mW
Purpose	Optimizing CD-R recording power of laser diode.
Symptom when Out of Adjustment	Incapable of CD-R recording, playing CD-Rs recorded on it. Sound pauses, track skipping, or bad RF wave form (though no failure in playing CD).

Adjustment method	FL Indication
[Procedure] 1. Enter the Test mode. 2. Press the INPUT key so that "ANALOG" appears on the FL display. 3. Press the ERASE key so that "CD-R" appears on the FL display. 4. Move the pickup to the position where the power is easy to measure by pressing the SCAN key. (⏮◀◀◀◀ ▶▶▶▶⏭) 5. Press the REC/REC MUTE and NAME key in order, and light the LD. <Adjustment of CD-R Record Power> 6. Turn the JOG key to adjust the power. Switch the coarse adjustment and the fine adjustment by pressing the REC/REC MUTE key, and adjust it. (initial state is the coarse adjustment.) 7. Press the PLAY/PAUSE key to register the adjustment if the power became the adjustment value. (assume the power when it was decided by A value) When it is registered, shift to the Overdrive power adjustment automatically. <Adjustment of CD-R Overdrive Power> 8. Turn the JOG key to adjust the power. Switch the coarse adjustment and the fine adjustment by pressing the REC/REC MUTE key, and adjust it. (initial state is the coarse adjustment.) 9. Press the ENTER key to register the adjustment if the power became the adjustment value. 10. Press the STOP key to goes out the LD, and adjustment is completed.	『00000000___x1』 『R_REC___*0000』 『R_OD_____*0000』 『00000000___x1』

DANGER – LASER RADIATION WHEN OPEN.
AVOID DIRECT EXPOSURE TO BEAM.

6.7.3 CD-RW Record Power Adjustment

Test Point	Pickup objective lens
Adjustment Value	RW Bias : 2.3 mW ± 0.05 mW, RW Rec : 3.2 mW ± 0.05 mW, RW Erase : 5.2 mW ± 0.1 mW
Purpose	Optimizing CD-RW recording power of laser diode.
Symptom when Out of Adjustment	Incapable of CD-RW recording, playing CD-RWs recorded on it. Sound pauses, track skipping, or bad RF wave form (though no failure in playing CD).

Adjustment method	FL Indication
[Procedure]	
1. Enter the Test mode.	『0 0 0 0 0 0 0 0 ___ x 1』
2. Press the INPUT key so that "ANALOG" appears on the FL display.	
3. Press the ERASE key so that "CD-RW" appears on the FL display.	
4. Move the pickup to the position where the power is easy to measure by pressing the SCAN key. (|◄◄◄◄ ►►►►|)	
5. Press the REC/REC MUTE and NAME key in order, and light the LD.	『R w B I A S _ ∗ 0 0 0 0』
<Adjustment of CD-RW Bias Power>	
6. Turn the JOG key to adjust the power. Switch the coarse adjustment and the fine adjustment by pressing the REC/REC MUTE key, and adjust it. (initial state is the coarse adjustment.)	
7. Press the PLAY/PAUSE key to register the adjustment if the power became the adjustment value. When it is registered, shift to the CD-RW Record Power Adjustment automatically.	
Note: In the CD-RW Bias Power Adjustment, in the case that the power is over 2.3 mW when the LD lighted, do not need to perform the Bias Power Adjustment. Set adjustment value of the CD-RW record power to + 0.9mW ± 0.05mW against the power in LD lighting then.	
	『R w R E C ___ ∗ 0 0 0 0』
<Adjustment of CD-RW Record Power>	
8. Turn the JOG key to adjust the power. Switch the coarse adjustment and the fine adjustment by pressing the REC/REC MUTE key, and adjust it. (initial state is the coarse adjustment.)	
9. Press the PLAY/PAUSE key to register the adjustment if the power became the adjustment value. When it is registered, shift to the CD-RW Erase Power Adjustment automatically.	
<Adjustment of CD-RW Erase Power>	
10. Turn the JOG key to adjust the power. Switch the coarse adjustment and the fine adjustment by pressing the REC/REC MUTE key, and adjust it. (initial state is the coarse adjustment.)	『R w E R A S _ ∗ ∗ ∗ ∗』
11. Press the ENTER key to register the adjustment if the power became the adjustment value.	
12. Press the STOP key to goes out the LD, and adjustment is completed.	『0 0 0 0 0 0 0 0 ___ x 1』

Cautions:

(1) All the reading values of power meter of this adjustment are values with an average.

(2) How to confirm the adjustment value:
When enter the power adjustment mode, enter it by pressing the REC/REC MUTE and DISPLAY keys in order.
Furthermore, can confirm the adjustment value of each power stored in EEPROM by switching the DISPLAY key.
However, RW cannot see all adjustment results. Use DAC the same as erase power in the Bias Power Adjustment, and perform the adjustment of record power while outputting the setting value of erase power decided in the Bias Power Adjustment. And perform the Erase Power Adjustment while outputting the setting value of the record power.
Therefore, the value of Bias Power Adjustment does not remain after adjustment of the erase power. (as for the displayed adjustment value, erase power is the same as bias power.)
It is only erase power that can confirm the adjustment result with the power meter among power of RW.
As for the value of Record Power Adjustment, only setting numeric value is readable, but output power becomes the same as the erase power.
Bias power cannot confirm the setting value, too. Be not used during actual record operations either.

6.8 SERVO ADJUSTMENT

■ MANUAL ADJUSTMENT

6.8.1 Preparations

1. Enter the TEST mode.
2. Press the INPUT key so that "OPTICAL" appears on the FL display.
3. Press the ERASE key more than three seconds to initialize it.
4. Press the SYNCHRO key to perform the average process.
   ➡"OPTICAL" disappears on the FL display when completed.

6.8.2 Focus Offset Adjustment

Test Point	CN102-pin 8 (Focus err)
Adjustment Value	0 mV ± 30 mV
Purpose	Optimizing DC offset voltage of focus-error amplifier.
Symptom when Out of Adjustment	Focus-in does not function, or bad RF wave shape.

Adjustment method	FL Indication
[Procedure] 1. Monitor the FOCUS ERROR waveform with VC. 2. Adjust the JOG key so that FE offset becomes zero. 3. Press the ENTER key to register the adjustment. 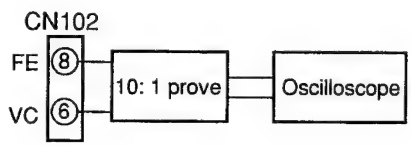 	『F E O S ___ 0 0 ___』 『F E O S ___ * * _ ? 』 『F E O S ___ * * ___』

6.8.3 SRFO Offset Adjustment

Test Point	CN102-pin 2 (RF)
Adjustment Value	0 mV ± 30 mV
Purpose	Optimizing DC offset voltage of RFDC output circuit when recording.
Symptom when Out of Adjustment	Recording does not function.

Adjustment method	FL Indication
[Procedure] 1. Press the AUTO SPACE key and shift to the SRFO Offset Adjustment. 2. Monitor the RFDC waveform with VC. 2. Adjust the JOG key so that RFDC offset becomes zero. 3. Press the ENTER key to register the adjustment. 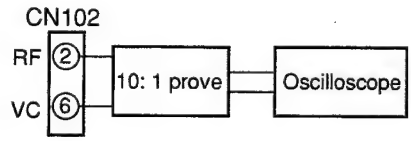 	『S R F O S _ 0 0 ___』 『S R F O S _ * * _ ? 』 『S R F O S _ * * ___』

6.8.4 RFOM Offset Adjustment

Test Point	CN102-pin 2 (RF)
Adjustment Value	0 mV ± 30 mV
Purpose	Optimizing DC offset voltage of RFDC output circuit when playing back.
Symptom when Out of Adjustment	Focus-in does not function, incapable of searching, or track skipping.

Adjustment method	FL Indication
[Procedure] 1. Press the AUTO SPACE key and shift to the RFOM Offset Adjustment. 2. Monitor the RFDC waveform with VC. 2. Adjust the JOG key so that RFDC offset becomes zero. 3. Press the ENTER key to register the adjustment. 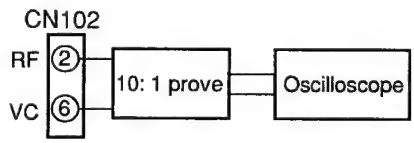	『R F O M O _ 0 0 _ _ _』 『R F O M O _ ＊ ＊ _ ?』 『R F O M O _ ＊ ＊ _ _ _』

6.8.5 MPP Offset Adjustment

Test Point	CN102-pin 4 (MPP)
Adjustment Value	0 mV ± 50 mV
Purpose	Optimizing DC offset voltage of main signal output circuit.
Symptom when Out of Adjustment	Playback does not function, incapable of searching, or track skipping.

Adjustment method	FL Indication
[Procedure] 1. Press the AUTO SPACE key and shift to the MPP Offset Adjustment. 2. Monitor the MPP waveform with VC. 2. Adjust the JOG key so that MPP offset becomes zero. 3. Press the ENTER key to register the adjustment. 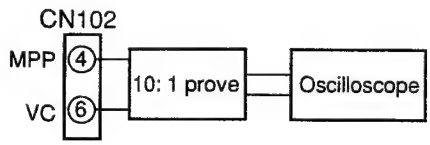	『M P P O S _ 0 0 _ _ _』 『M P P O S _ ＊ ＊ _ ?』 『M P P O S _ ＊ ＊ _ _ _』

6.8.6 SPP Offset Adjustment

Test Point	CN102-pin 3 (MPX)
Adjustment Value	0 mV ± 50 mV
Purpose	Optimizing DC offset voltage of sub-signal output circuit.
Symptom when Out of Adjustment	Playback does not function, incapable of searching, or track skipping.

Adjustment method	FL Indication
[Procedure] 1. Press the AUTO SPACE key and shift to the SPP Offset Adjustment. 2. Monitor the MPX waveform with VC. 2. Adjust the JOG key so that SPP offset becomes zero. 3. Press the ENTER key to register the adjustment. 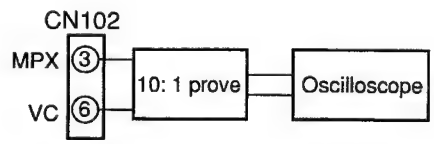 	『S P P O S _ 0 0 _ _ 』 『S P P O S _ * * _ ? 』 『S P P O S _ * * _ _ 』

6.8.7 Tracking Gain adjustment

Test Point	CN102-pin 3 (MPX)
Adjustment Value	Minimize (MPP+SPP)
Purpose	Matching gains of pickup main signal output and sub-signal output.
Symptom when Out of Adjustment	Playback does not function, or incapable of searching.

Adjustment method	FL Indication
[Procedure] 1. Press the AUTO SPACE key and shift to the Tracking Gain (MS MIX) Adjustment. 2. Move the Pickup to center of the disc by pressing the SCAN key. (◄◄◄◄ ►►►►) 3. Monitor the MPX signal and set a CD disc. 4. Press the FINALIZE key to FOCUS IN. 5. Press the PLAY/PAUSE key to turn the SPINDLE. (CAV) 6. Adjust the JOG key so that MPX waveform (MPP+SPP) becomes minimum. 7. Press the ENTER key to register the adjustment. 8. Press the STOP key to stop the disc rotation. 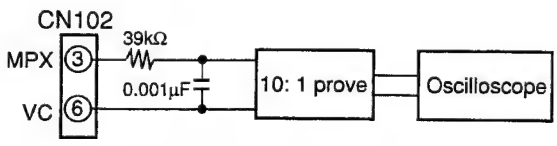 	『S P P G _ _ 7 0 _ _ 』 『S P P G _ _ * * _ ? 』 『S P P G _ _ * * _ _ 』

6.8.8 MPP Offset Readjustment

Test Point	CN102-pin 5 (Tracking err)
Adjustment Value	0 mV ± 50 mV
Purpose	Optimizing DC offset voltage of tracking-error output circuit.
Symptom when Out of Adjustment	Playback does not function, incapable of searching, or track skipping.

Adjustment method	FL Indication
[Procedure] 1. Press the AUTO SPACE key and shift to the MPP Offset Readjustment. (Press the AUTO SPACE key several times to appear the right indication.) 2. Monitor the TE waveform with VC. Be careful with monitoring TE waveform instead of MPP waveform in the readjustment ! 3. Adjust the JOG key so that TE offset becomes zero. 4. Press the ENTER key to register the adjustment. 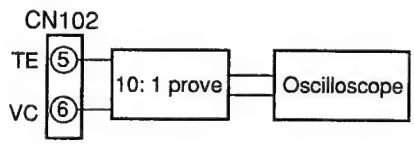 	『M P P O S _ * * _ _ 』 『M P P O S _ * * _ ? 』 『M P P O S _ * * _ _

6.8.9 Focus Bias Adjustment

Test Point	CN102-pin 2 (RF)
Adjustment Value	Minimize jitter value
Purpose	Optimizing DC offset voltage of focus servo loop circuit including pickup.
Symptom when Out of Adjustment	Focus-in does not function, sound pauses, bad RF wave form, or incapable of playing some discs.

Adjustment method	FL Indication
[Procedure]	
1. Press the AUTO SPACE key and shift to the Focus Bias Adjustment.	‖F B I A S _ 0 0 _ _ _‖
2. Press the SYNCHRO key to perform the average process.	
➡ "OPTICAL" disappears on the FL display when completed.	
3. Move the Pickup to center of the disc by pressing the SCAN key. (I◄◄◄◄ ►►►►I)	
4. Monitor the jitter value and set a CD disc. (use the jitter meter)	
5. Press the FINALIZE key to FOCUS IN.	
6. Press the PLAY/PAUSE key to turn the SPINDLE. (CAV)	
7. Press the PLAY/PAUSE key to TRACKING ON. (EFM CLV)	
8. Adjust the JOG key so that jitter value becomes minimum.	‖F B I A S _ * * _ ?‖
9. Press the ENTER key to register the adjustment.	‖F B I A S _ * * _ _ _‖
➡ Shift to the RFDC Level Adjustment automatically.	‖R F D C _ _ _ * * _ _ _‖
10. Adjustment is completed automatically.	‖R F D C _ _ _ A D J _ O K‖
➡Each display the reason that became abnormal when adjustment was not completed normally.	
When did not converge in limit of adjustment possibility (when it became the lowest level)	‖R F D C _ _ _ A D J _ N G‖
When failed in writing to the EEPROM	‖R F D C _ _ _ E E P _ N G‖
11. Press the STOP key to stop the unit.	‖F B I A S _ * * _ _ _‖
Caution:	
In this adjustment, shift to the RFDC Adjustment when pressing the ENTER key before step 9, and there is it when completed in normal on the indication.	
However, must not omit operation of steps 7 from 5 because RFDC is not adjusted to normal when pressing the ENTER key with the state that steps 7 from 5 are not executed.	
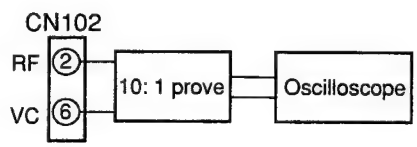	

- The arbitrary value that "* *" modified it by adjustment.
- "?" is not displayed in the point that selected an item with the AUTO SPACE key, and blink when changes setting value by the input of the JOG key. Press the ENTER key to register the setting value, and disappear the FL indication that the setting value is stored in the EEPROM by normal.

■ AUTOMATIC ADJUSTMENT

6.8.10 Preparation

Test Point	CN102-pin 3 (MPX)
Discs to be Used	CD test disc (STD-903)

Method	FL Indication
[Procedure] 1. Press the INPUT key so that "OPTICAL" appears on the FL display. ➡ If it was not displayed the Focus Offset Adjustment, press the AUTO SPACE key and shift to the Focus Offset Adjustment. 2. Monitor the MPX signal with VC and set a CD disc. 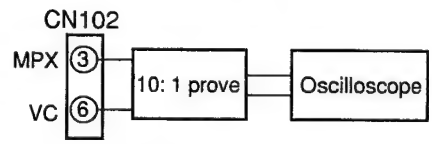 	‖F E O S ___ * * ___‖

6.8.11 Automatic Adjustment Start

Method	FL Indication
[Procedure] 1. Press the REC/REC MUTE key to start the automatic adjustment. ➡ Execute it from "6.8.1 preparations" to "6.8.6 SPP Offset Adjustment" of the Manual Adjustment automatically. And stop by the state that selected an item of next "6.8.7 Tracking Gain Adjustment" once.	‖F E O S ___ 0 0 _ ?‖ ‖S P P G ___ 7 0 ___‖

6.8.12 Tracking Gain Adjustment

Test Point	CN102-pin 3 (MPX)
Adjustment Value	Minimize (MPP + SPP)
Purpose	Matching gains of pickup main signal output and sub-signal output.
Symptom when Out of Adjustment	Playback does not function, or incapable of searching.

Adjustment method	FL Indication
[Procedure] 1. Move the Pickup to center of the disc by pressing the SCAN key. (⏮⏮⏮⏮ ⏭⏭⏭⏭) 2. Monitor the MPX signal with VC and set a CD disc. 3. Press the FINALIZE key to FOCUS IN. 4. Press the PLAY/PAUSE key to turn the SPINDLE. (CAV) 5. Adjust the JOG key so that MPX waveform (MPP+SPP) becomes minimum. 6. Press the ENTER key to register the adjustment. ➡ Stop the disc rotation and Excute "6.8.8 MPP Offset Readjustment" automatically. And select an item of next "6.8.9 Focus Bias Adjustment", and stop with the state completed to average processing. 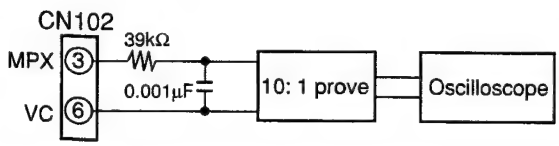 	‖S P P G ___ * * _ ?‖ ‖S P P G ___ * * ___‖ ‖F B I A S _ 0 0 ___‖

6.8.13 Focus Bias Adjustment

Test Point	CN102-pin 2 (RF)
Adjustment Value	Minimize jitter value
Purpose	Optimizing DC offset voltage of focus servo loop circuit including pickup.
Symptom when Out of Adjustment	Focus-in does not function, sound pauses, bad RF wave form, or incapable of playing some discs.

Adjustment method	FL Indication
[Procedure] 1. Move the Pickup to center of the disc by pressing the SCAN key. (⏮◀◀◀◀ ▶▶▶▶⏭) 2. Monitor the jitter value and set a CD disc. (use the jitter meter) 3. Press the FINALIZE key to FOCUS IN. 4. Press the PLAY/PAUSE key to turn the SPINDLE. (CAV) 5. Press the PLAY/PAUSE key to TRACKING ON. (EFM CLV) 6. Adjust the JOG key so that jitter value becomes minimum. 7. Press the ENTER key to register the adjustment. ➡ Shift to the RFDC Level Adjustment automatically. 8. Adjustment is completed automatically. ➡ Each display the reason that became abnormal when adjustment was not completed normally. When did not converge in limit of adjustment possibility (when it became the lowest level) When failed in writing to the EEPROM 9. Press the STOP key to stop the operation. **Caution:** In this adjustment, shift to the RFDC Adjustment when pressing the ENTER key before step 7, and there is it when completed in normal on the indication. However, must not omit operation of steps 5 from 3 because RFDC is not adjusted to normal when pressing the ENTER key with the state that steps 5 from 3 are not executed. 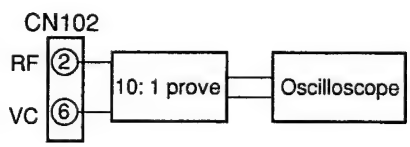 	『F B I A S _ * * _ ? 』 『F B I A S _ * * _ _ 』 『R F D C _ _ * * _ _ 』 『R F D C _ _ _ A D J _ O K 』 『R F D C _ _ _ A D J _ N G 』 『R F D C _ _ _ E E P _ N G 』 『F B I A S _ * * _ _ 』

How to execute the automatic adjustment once again after the automatic adjustment is completed:
1. Press the STOP key to stop the disc rotation. (servo OFF)
2. Press the AUTO SPACE key and shift to the Focus Offset adjustment.
3. Press the REC/REC MUTE key to start the automatic adjustment.

Adjust from "6.8.11 automatic Adjustment Start" to "6.8.13 Focus Bias Adjustment".
Press the STOP key when stops execution of the automatic adjustment on the way and stop processing. Then return to the state of "6.8.10 Preparations" and stop the operation.

<Pickup replacement repair, the final check inspection method after adjustment>

Disk required:
CD-R disc
* [STD-R07(PVC:RDD-74B,RDD-74BJ)]
[STD-R08(PVC:RDD-74,RDD-74U)]
or equivalent
CD-RW disc
* [STD-R11(PVC:RDW-74,RDW-74J)]
or equivalent

[Inspection items]

1. Recording-playback jitter
Method: Measure RF signal (CN102-pin2) by Jitter Meter (Trailing edge).
Specification: 35nS or below.

2. Recording-playback block error
Method: While pushing "CD-R CONTROL" side "DISPLAY" key, press "REC MODE" key.
Display: appears in about 4 sec like C1 * * * * *
Specification: 65 pieces or less
(Press "STOP" key to reset display)

3. Recording-playback ATIP error
Method: While pushing "CD-R CONTROL" side "DISPLAY" key, press "AUTO SPACE" key.
Display: appears in about 10 sec like ATIP * * * * * *
The three digits on the left = Total number of errors
The three digits on the right = Maximum continuous error number (Specification item)
Specification: Max continuous error (Right side datum) must be 7 pieces or less.
(Press "STOP" key to reset display)

[Warning]
Scratch, dust, fingerprint, etc. on recording disc may cause deterioration of performance. Take care of the discs.
When CD-RW disc is used for measurement, do not use the same position at more than 100 times.

7. GENERAL INFORMATION

7.1 DIAGNOSIS

7.1.1 ERROR CODE (CD-R)

Error Code Display for Service

The PDR-W839 can display the error codes for service.
When the DISPLAY key of the CD-R side and ERASE key is held down simultaneously, an FL display as shown below is

- Display

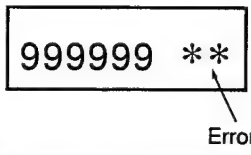

Right 2 FL digits : Error code for service

The error code for service is displayed as a number (ERROR NUMBER), which follows a message "CHECK DISC" or "CHECK." For details, see the table below.

Error code table for service

Code	Symptom	Contents of Error	Possible Cause	Checkpoints
L*	The unit stops during the tray open/close operation. (CHECK display)	Improper loading	• Defective tray position sensor • Defective loading motor • Improper soldering • Pattern short • Improper power supply	IC451 (BA5810FP)
E*	The unit stops when PLAY or REC/PAUSE starts. (CHECK display)	Defective slider • The pickup cannot be returned to the specified position.	• Disconnected flexible cable • Defective drive circuit • Abnormal power supply • Abnormal TOC position switch • Improper soldering	S601 (PSG1014) IC451 (BA5810FP) IC401 (CXD2585Q)
P*	The unit does not read the inserted disc, and stops. (CHECK DISC display)	Defect in spindle • Disc upside-down. • Dirty or cracked disc • Abnormal disc rotation • No signal obtained from the disc	• Defective spindle motor • Defective spindle drive circuit • Abnormal FG signals • Defective WBL circuit • Defective decoder circuit • Unable to read ATIP or subcode • High error rate	PC651 (NJL5809K-F1) IC451 (BA5810FP) IC401 (CXD2585Q)
C*	The unit stops before it enters REC/PAUSE mode.	Defects related to the recording laser power • Dirty or cracked disc • The optimum recording power cannot be obtained. • Trouble in RF detection.	• Defective laser diode • Trouble in RF detection • Defective RFT RFB circuit • Recording power is not sufficient. • Improper soldering, pattern short • Trouble with power supply • Unable to read ATIP or subcode	IC201 (PA9007A) IC101 (AK8567) IC308 (TC7S14F)
F*	The unit stops during playback or recording.	Defective pickup • Unable to focus because of dirt or crack on the inserted disc. • Unable to output the proper laser power	• Defective laser diode • Defective focus drive circuits • Defective pickup • Improper soldering • Pattern short • Trouble of power supply	IC451 (BA5810FP) IC401 (CXD2585Q)
A*	The unit stops in a recording-related operation, displaying "CHECK DISC."	• Unable to focus Stop during recording • The unit stops, being obstructed by a dirt or a crack on the disc.	If any hardware trouble occurs before displaying A* or d*, the unit stops displaying a code other than these codes. Therefore, these service codes are generated only for troubles with the disc.	
d*	The unit stops in a recording related operation, displaying "CHECK DISC." The unit does not read the inserted disc, and stops.			

The indication for * shows themechanism mode listed below.

No.	Mechanism Mode	No.	Mechanism Mode	No.	Mechanism Mode
0	PLAY	5	SETUP	A	REC
1	OPEN	6	TOC READ	B	TOC REC
2	STOP	7	–	C	OPC
3	–	8	SEARCH	D	TOC CHECK
4	–	9	REC/PAUSE	E	PMA, ACTUAL PAUSE REC

Error code table for service

Code	Generation Condition
L*	In the tray opening procedure, if opening is not completed within 4.5 sec., the procedure moves to closing. Afterwards if this closing is not completed within 4.5 sec., the procedure recalls opening again. If the recalled opening procedure is not also completed within 4.5 sec., the operation halts. Doing the tray closing procedure, if closing is not completed within 4.5 sec., the procedure moves to opening action. Afterwards if the opening procedure is not completed within 4.5 sec., the operation halts.
E*	(1) When the slider moves in REV direction, if TOC position SW does not become "H" within 3.4 sec., the operation halts. (2) After (1) is completed normally and then the slider moves in the FWD direction, if TOC position SW does not become "L" within 300 msec., the operation halts. (3) After (2) is completed normally and then the slider moves in the REV direction, if TOC position SW does not become "H" within 300 msec., the operation halts.
P*	When Q data is not read in 1 sec. and ATIP data is not read in 1 sec. ,the system tries to read them 3 times. If both Q data and ATIP data are still not read, the operation halts, etc.
C*	When reading PCA area, if searching for the playback starting position has failed, this is tried twice. If the search is not completed, the operation halts. When writing PCA area, the rotation does not reach to the required speed at writing position, and it is not possible for the writing to start. If searching for the writing starting position fails,it is retried 19 times, and if both are still incomplete, then the operation halts.
F*	Once disk discrimination is completed, and focus-in action is failed, then the operation halts.
A*	If the pick-up jump occurs during recording, and it is not recovered, then the operation halts. If ATIP data is not read for 4 sec. during recording, then the operation halts.
d*	If PMA writing is not completed within 60 sec., then the operation halts. If reading of TOC and PMA have failed, or there is missing information observed in the read data, an error occurs. When recording is started, if RF signal exists instead of NO RF at the end edge boundary of the disc, an error occurs.

7.1.2 SOLUTION OF 3CD TRAY MISMATCHING

<SOLUTION WHEN 3CD POSITION MISMATCHING OCCURS>

Just after power on, if clamped tray is different from the disc number displayed on FL indicator, proceed with the following operations.

1. Press "OPEN/CLOSE1" key to open the tray. Even the tray that has come out at this time is not tray1, keep doing the following procedure.
2. When tray-opening operation is completed, press "OPEN/CLOSE2" key to open the next tray.
3. Like the previous operation when tray-opening operation is completed, press "OPEN/CLOSE3" key to open the next tray.
4. When tray-opening operation is completed, then press "OPEN/CLOSE1" key again. If the tray 1 is opened, The procedure is completed.
   If this procedure does not recover mismatched tray , turn power off/on then repeat the whole procedure above again.

Warning) In case you start the self-reset mode during the operation, wait until the operation is completed and then proceed the operations from the next step.

7.1.3 POWER ON SEQUENCE

POWER ON SEQUENCE (Display System)

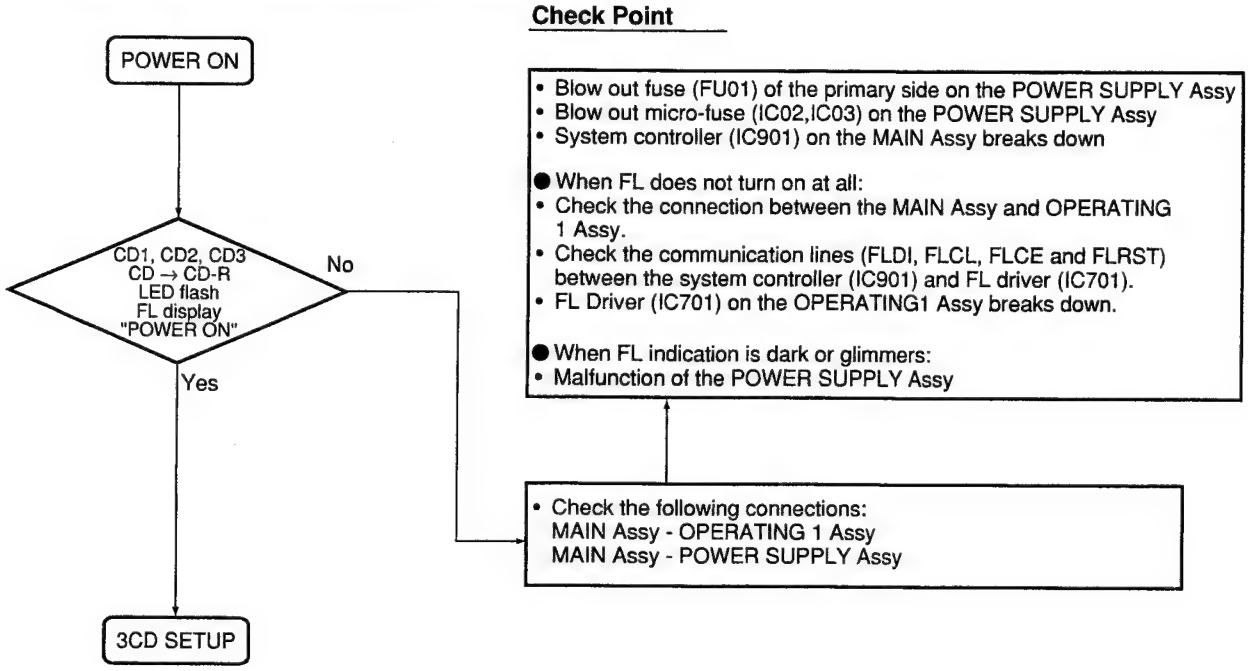

SETUP SEQUENCE (CD-R)

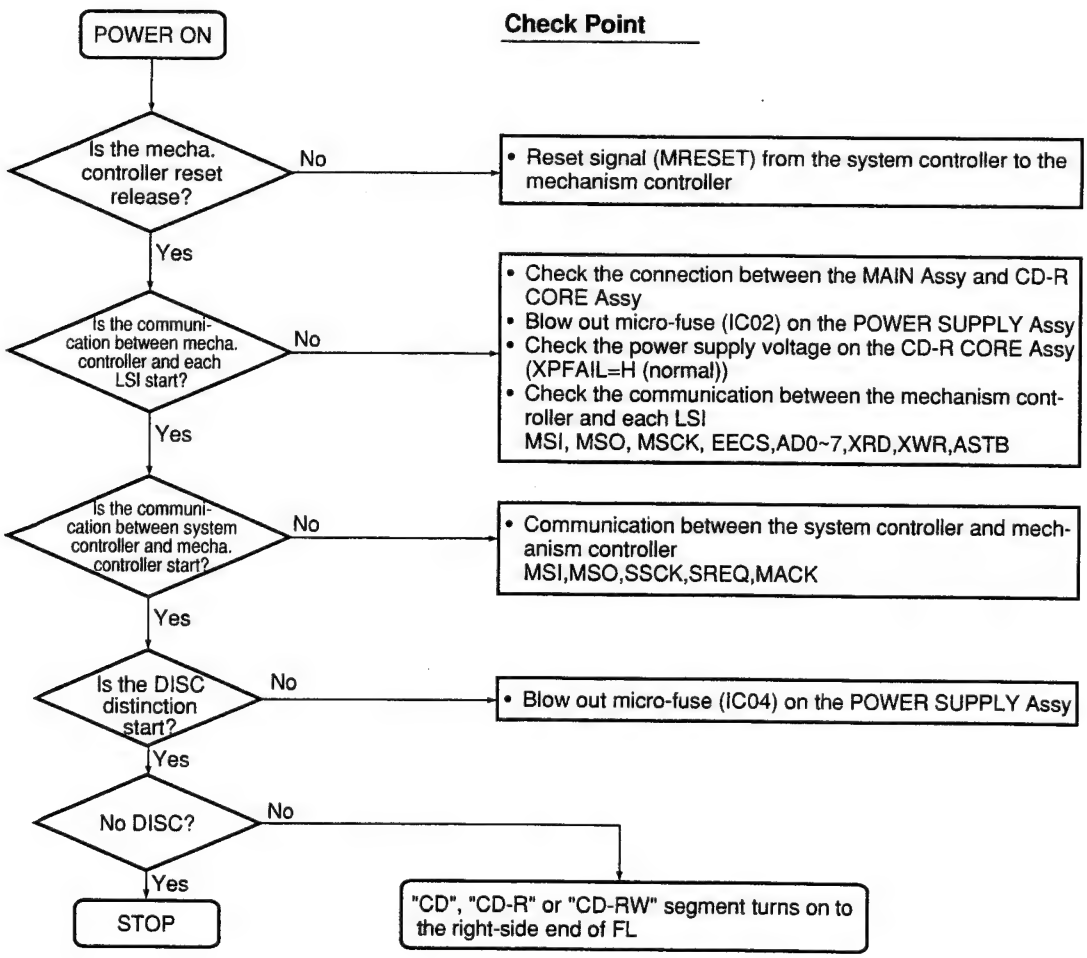

SETUP SEQUENCE (3CD)

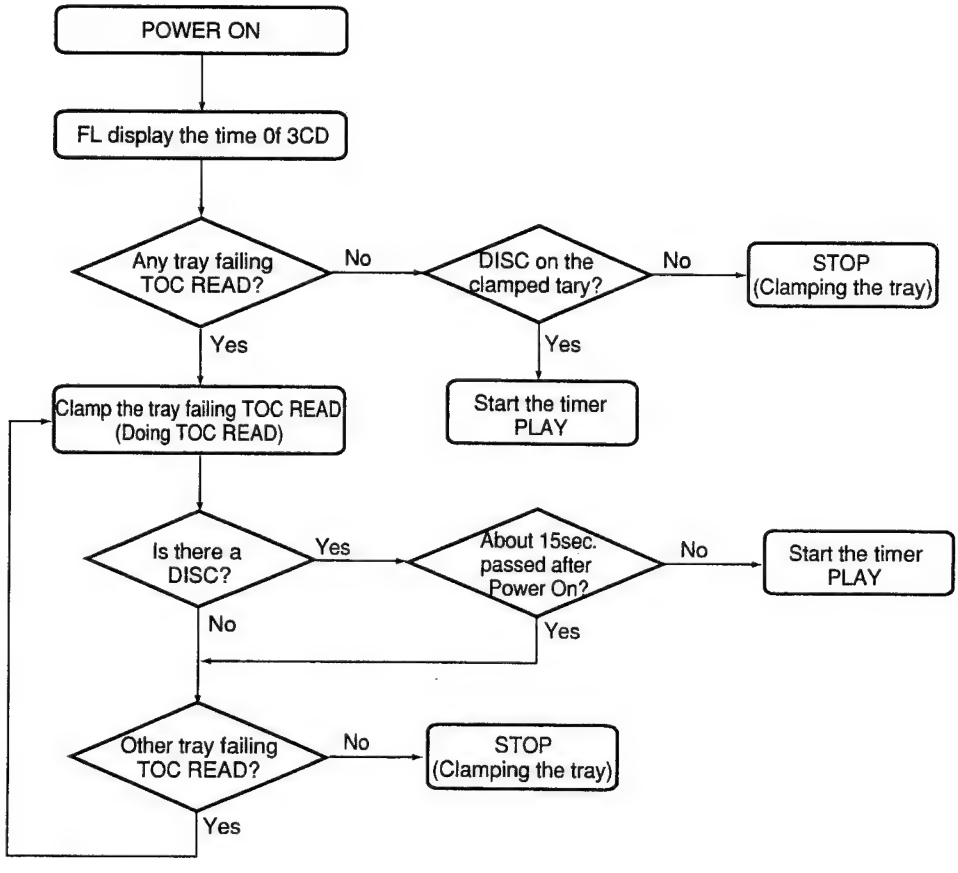

Confirm the check point below when the sequnce does't work as above,
or the 3CD does't work when pushing the key (OPEN/CLOSE key,PLAY key,etc).

Check Point

- Check the connection between 3CD CORE Assy and the MAIN Assy
- Blow out micro-fuse (IC01) on the POWER SUPPLY Assy.
- Check the logic of mechanism SW. (Refer to the "• Initialization sequence at POWER ON of 3CD MICRO CHANGER MECHANISM".
- Check the select drive signal
  SELO+(CN1302 pin 8), SELO-(CN1302 pin 9)
- Check the loading drive signal
  LO+(CN1302 pin 10), LO-(CN1302 pin 11)

● Initialization Sequence at POWER ON of 3CD MICRO CHANGER MECHANISM

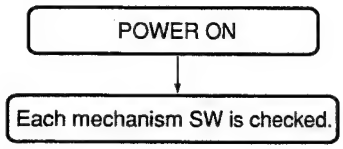

MECHA SW

- SELINIT SW (pin 4)
- SEL SW (pin 5)
- OPEN SW (pin 90)
- CLOSE SW (pin 91)
- CLAMP SW (pin 6)
- HOME SW (pin 7)

	Mechanism SW logic at HOME position	at CLAMP position
• SELINIT SW	"L"	"L"(clamp tray1) /"H"(clamp tray2,3)
• SEL SW	"L"	"L"
• OPEN SW	"H"	"H"
• CLOSE SW	"L"	"L"
• CLAMP SW	"H"	"L"
• HOME SW	"L"	"L"

Setting the initial condition for shipping

Setting the initial operating condition

The factory default settings shall be as below.
For reason that this product memorizes the condition of below items by back-up battery.

Note) All items are reset to the factory default setting when pushing the MENU key about 10 sec.

Adjusting the shipping position of mechanism.
Before shipping, it is necessary to adjust the shipping position of the mechanism. See following.

< CD-R tray mechanism >
1. Open CD-R tray and remove a disc.
2. Push OPEN/CLOSE button and wait until the FL display "NO DISC".

< 3CD changer mechanism >
1. Open the tray; CD1–CD3, and remove all discs . And close the tray.
2. Wait until DISC1 to 3 indicators on the FL display, see right, are put out all and the mechanism is stopped.
3. ON pushing "STOP(CD-R side)" key, and push "PLAY MODE" key .
   → "OK!" is displayed on the FL display, then the mechanism is set to the shipping position.
4. Turn off the power.

DISC 1
DISC 2
DISC 3

Item Initial	condition
REC volume(Analog)	0dB
REC volume(Optical)	0dB
REC volume(Coaxial)	0dB
REC volume FIX(Analog)	ON
REC volume FIX(Optical)	ON
REC volume FIX(Coaxial)	ON
INPUT SELECTOR	ANALOG
MENU	
H.P. LEVEL	L
A.TRACK	ON
A.LVL(Analog)	-54dB
A.LVL(Optical)	-54dB
A.LVL(Coaxial)	-54dB
FADER(Analog)	5sec
FADER(Optical)	5sec
FADER(Coaxial)	5sec
T.INC	OFF
BALANCE(Analog)	center
BALANCE(Optical)	center
BALANCE(Coaxial)	center

7.1.4 ERROR MEESAGE "CHECK TEMP"

If recording is operated on the PDR-W839 in high or low temperatures, a message "CHECK TEMP" is displayed for several seconds, the operation halts, and then afterwards the display changes to "MONITOR".

This message is displayed to indicate what happens to recording and playback operation if the product is placed on a hot object like an amplifier or in a closed space like a rack in which an object omitting heat such as an amplifier would make it even hotter. If the product is moved to different temperature, the problem disappears. When the temperature sensor inside the product hits +70°C or higher, or -15°C or lower, the message is displayed. Once displayed, all actions stop. In addition, the product will be warmer than the temperature outside the casing and the outside product threshold temperature would be a little lower. These temperatures are not specifications that guarantee operation.

7.1.5 CD-R DISC MANUFACTURER CODE

PDR-W839 has a function to check the "Manufacturer Code" of a CD-R disk. By checking the information in the "Lead-in Start Time", which is displayed when the following procedure is performed, against the following table, the manufacturer becomes clear. Verification whether this is a checked disk or not becomes possible. Be reminded that in the case of CD-R disks, label indication is sometimes different from manufacturer's name. Through this operation you can provide more exact information regarding to unchecked disks to your customers. It is worth using.

*Operation procedure

(1) Insert the disc to verify the manufacturer.
↓
(2) While pushing "CD-R CONTROL" side "DISPLAY" key, press "INPUT" key.
↓
(3) Check that the DISPLAY reads "PEC*********" (RID).
↓
(4) Press the "INPUT" key 14 times.
↓
(5) Check that the DISPLAY reads "LIA 97:**:**"
↓
(6) Refer this value to the following table.
↓
(7) Press "STOP" key to end

MANUFACTURER CODE LIST

<OPERATION CONFIRMATION MEDIA>

MEDIA MAKER	(74min.,80min.,21min. group)	(63min.,18min. group)
TDK Corporation ; 80min. group	97:15:00 ~ 04	
Ritek Co. : 80min. group	97:15:10 ~ 19	
Mitsubishi Chemical Co. : 80min. group	97:15:20 ~ 24	
Taiyo Yuden Company Ltd.	97:24:00 ~ 04	97:46:00 ~ 04
Sony Corporation	97:24:10 ~ 14	
Hitachi Maxell. Ltd.	97:25:20 ~ 24	
FUJI Photo Film Co. ,Ltd.	97:26:40 ~ 44	
Pioneer Video Corporation	97:27:30 ~ 34	97:48:30 ~ 34
Kodak Japan Limited	97:27:45 ~ 49	97:48:15 ~ 19
Mitsui Chemical, Inc.	97:27:55 ~ 59	97:48:55 ~ 59
Ricoh Co. ,Ltd.	97:27:65 ~ 69	
Ritek Co. : 80min. group 74min. group	97:31:00 ~ 09	
TDK Corporation : 74min. group	97:32:00 ~ 04	97:49:00 ~ 04
Mitsubishi Chemical Corporation : 74min. group	97:34:20 ~ 24	

* Even above confirmed discs may be changed to be not suported when media change is done after product design and it becomes unable to gurantee the constant performance.

<Not suported MEDIA>

MEDIA MAKER	(74min.,80min.,21min. group)
Seantram Technology Inc.	97:22:15 ~ 19
Acer Media Technology, Inc.	97:22:60 ~ 64
AMS Technology Inc.	97:25:50 ~ 54
Xcitek Inc.	97:25:60 ~ 64
FORNET INTERNATIONAL PTE LTD.	97:26:00 ~ 04
POSTECH Corporation	97:26:10 ~ 19
Lead Data Inc	97:26:50 ~ 59
CMC Magnetics Corporation	97:26:60 ~ 69
DIGITAL STORAGE TECHNOLOGY CO. ,LTD.	97:27:01 ~ 04
Plasmon Data systems Ltd.	97:27:15 ~ 19
Princo Corporation	97:27:26 ~ 28
GIGASTORAGE CORPORATION	97:28:10 ~ 19
Multi Media Masters & Machinary SA	97:28:20 ~ 24
Vanguard Disc Inc.	97:29:10 ~ 14
Prodisc Technology Inc.	97:32:15 ~ 19

* The discs displayed code except listed above are not confirmed media.

7.1.6 DISASSEMBLY

■ Bonnet

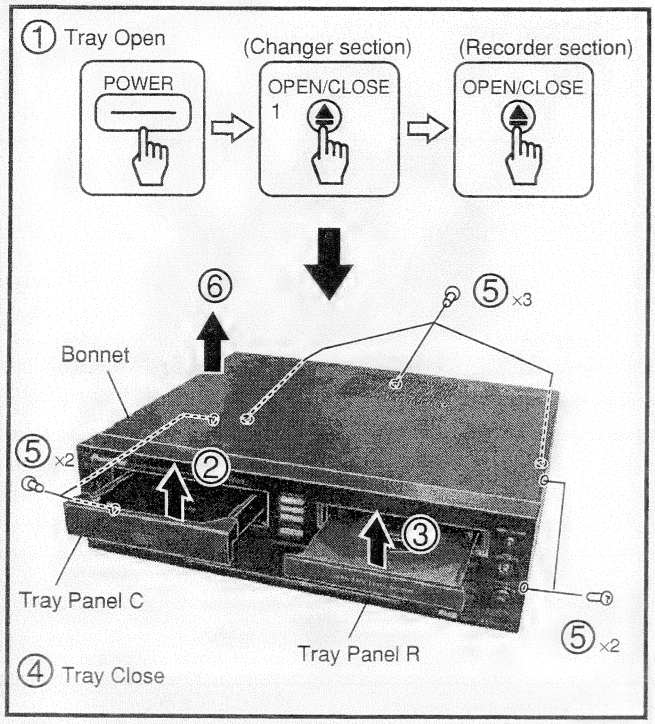

■ CD-R CORE ASSY

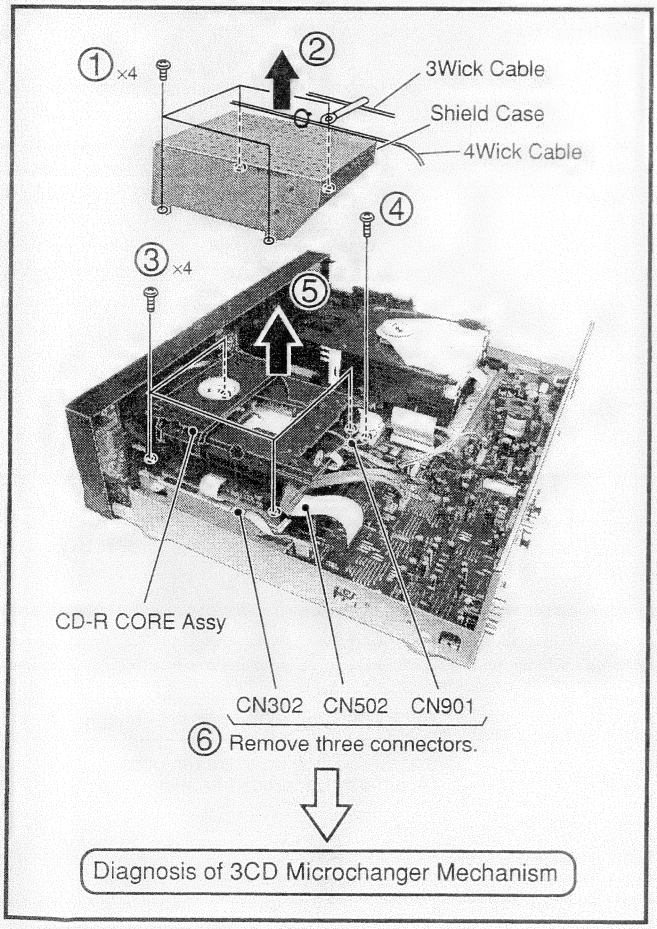

● Servo Mechanism Block

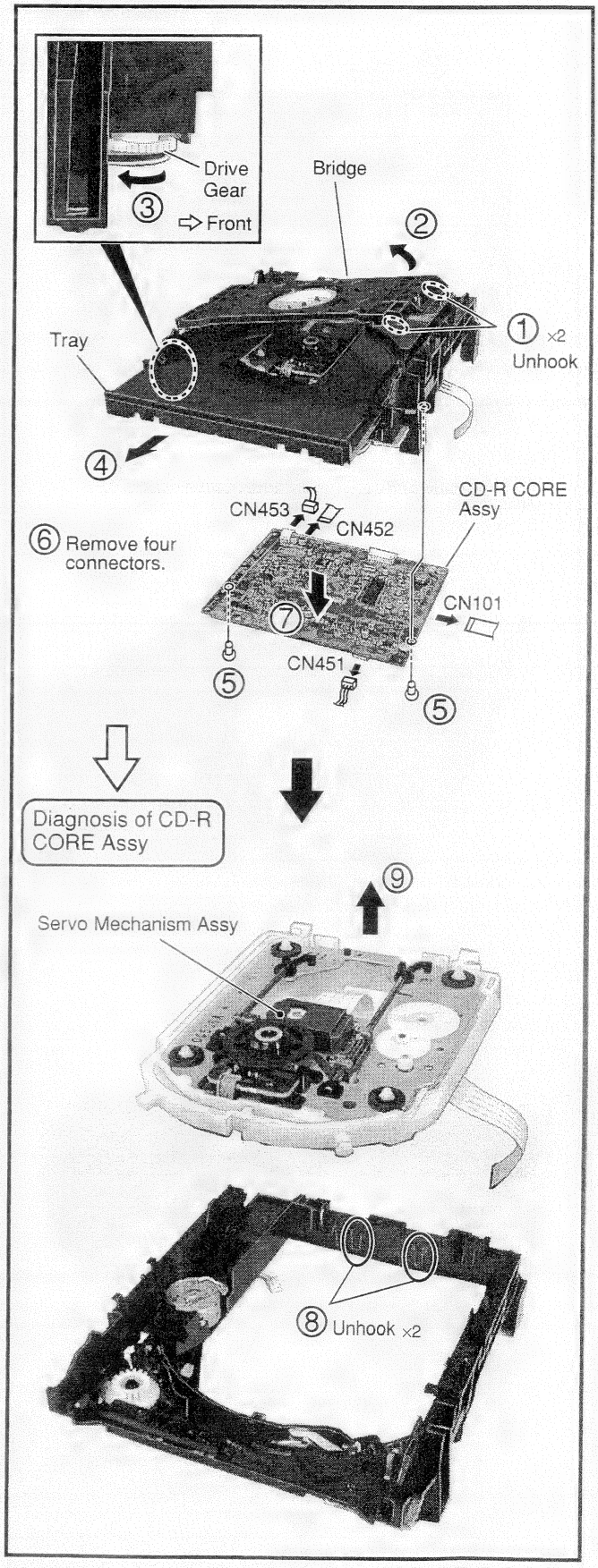

■ 3CD MICROCHANGER MECHANISM

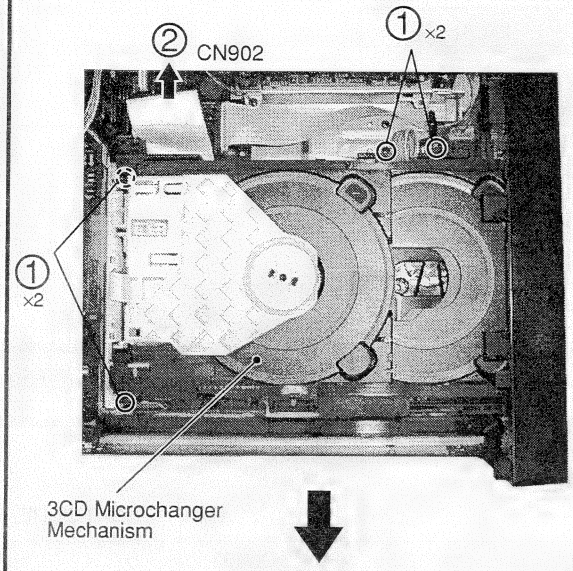

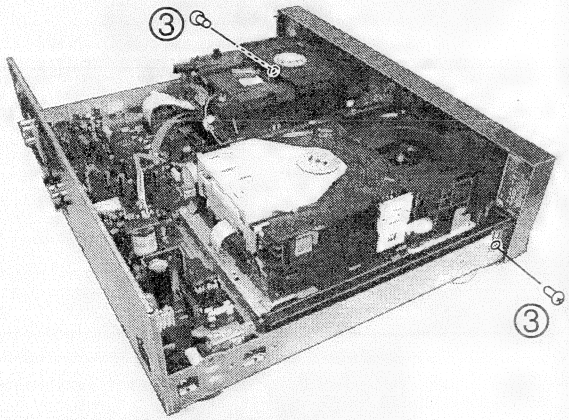

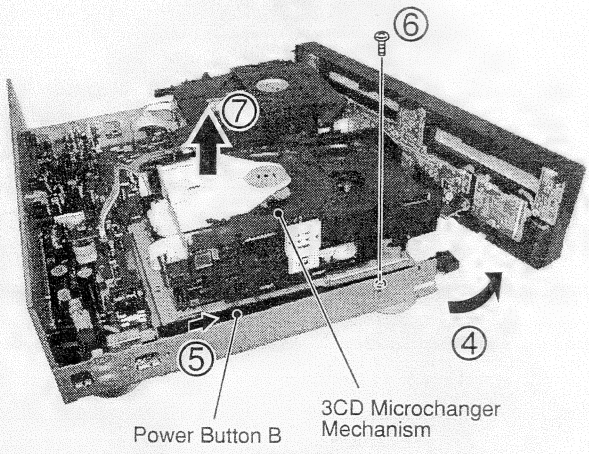

• **Bottom view**

⑩ Remove four connectors.

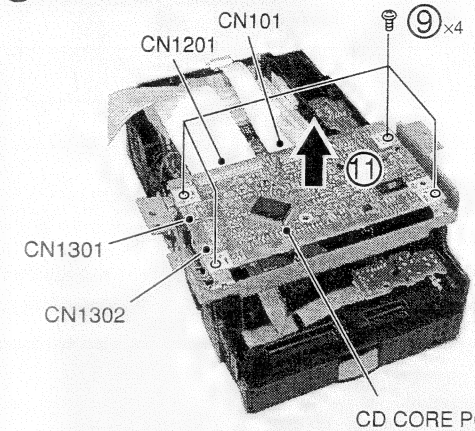

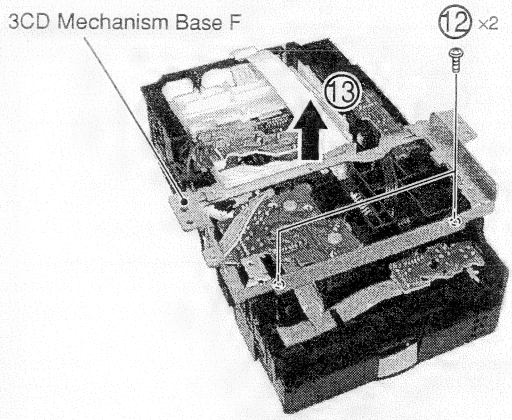

• **Top view**

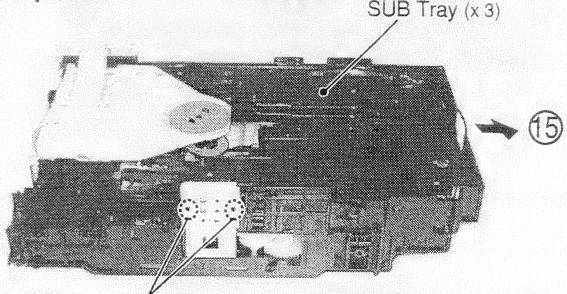

Hook (x2) is removed and the elevator, the elevator cover, the gear shaft, and the loading gear are removed. (A sub-tray becomes free.)

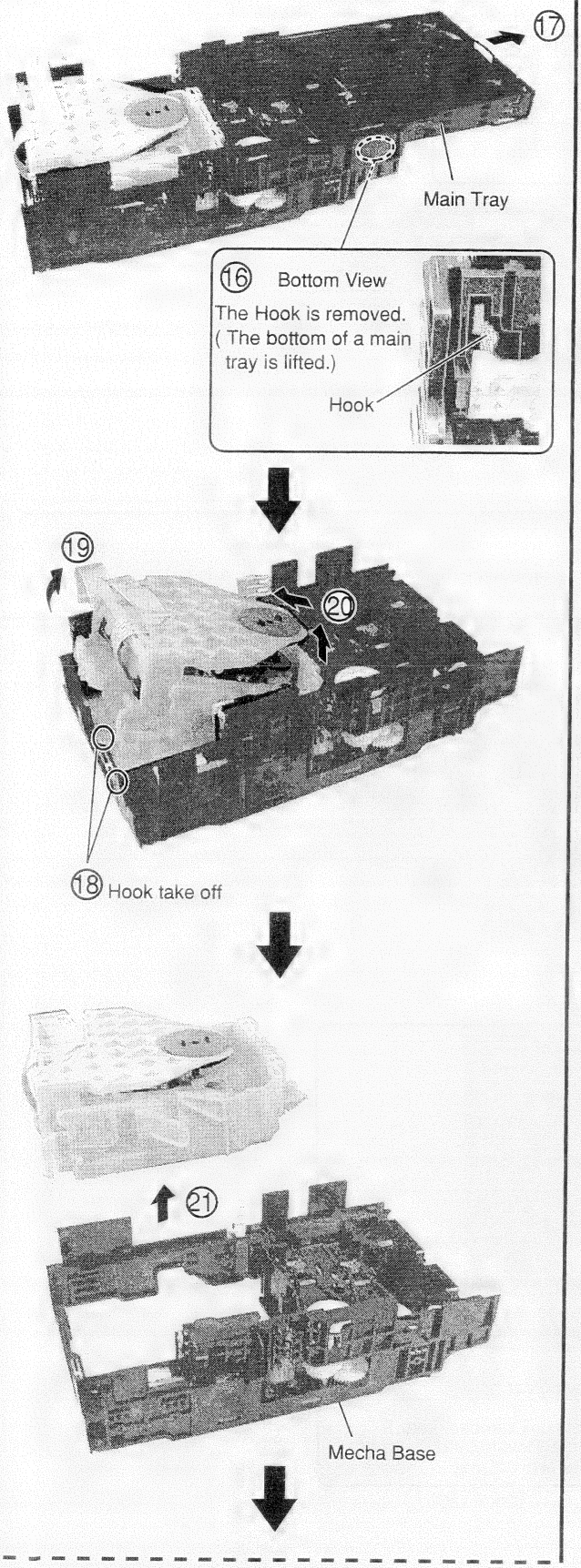
⑰
Main Tray
⑯ Bottom View
The Hook is removed.
(The bottom of a main tray is lifted.)
Hook
⑲
⑳
⑱ Hook take off
㉑
Mecha Base

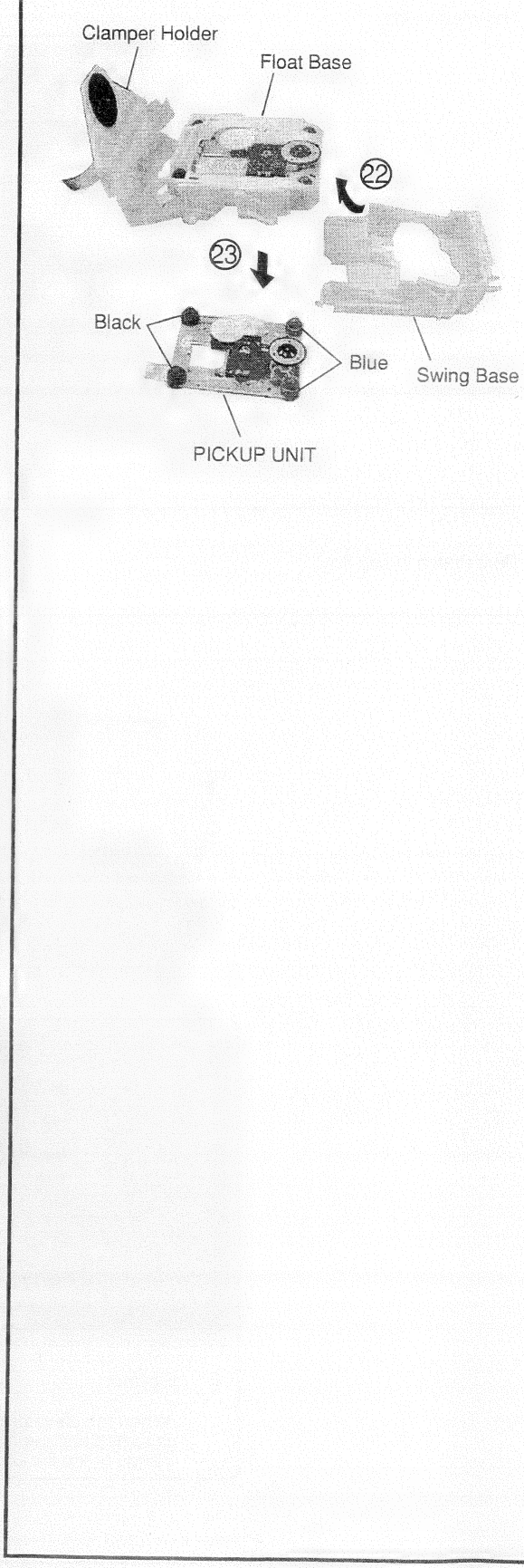
Clamper Holder
Float Base
㉒
㉓
Black
Blue
Swing Base
PICKUP UNIT

● Attention when 3CD MICROCHANGER MECHA is assembied

① Tray installation

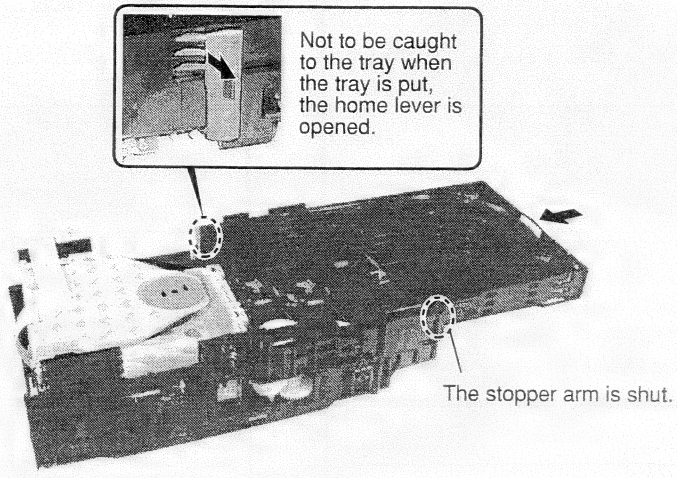

② Gear match of sub-tray

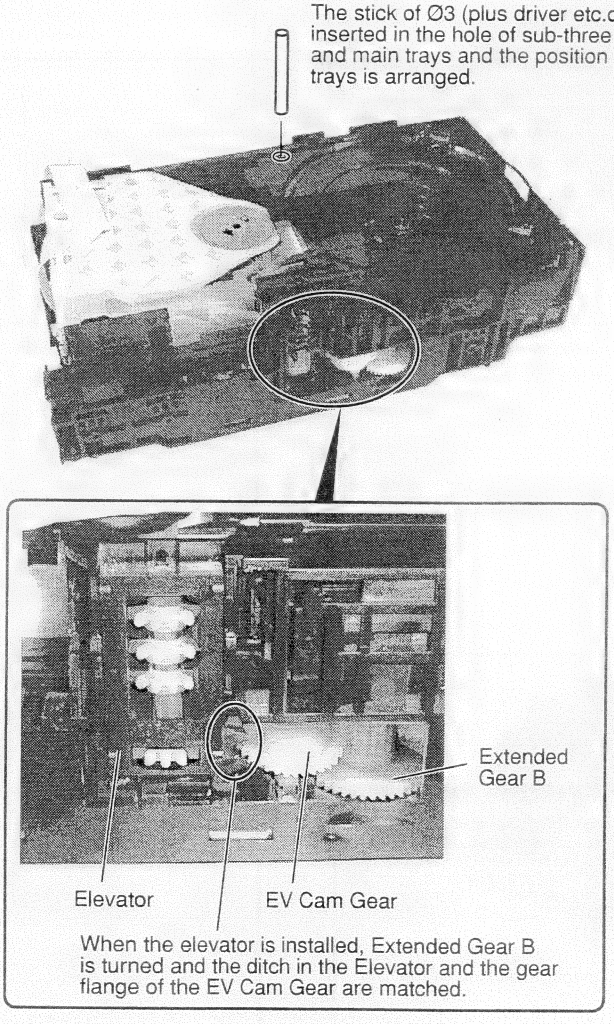

7.1.7 DIAGNOSIS OF 3CD MICROCHANGER MECHANISM and MAINASSY

When diagnosing the 3CD Microchanger Mechanism and MAIN Assy, use the following Flexible Cables and Connector Assy for service.
(When you diagnose only 3CD Microchanger Mechanism, the product operates with CD-R CORE ASSY removed.)

① Remove the CD-R CORE Assy.

② Replace three cables (❶ ~ ❸) for service and diagnose it.

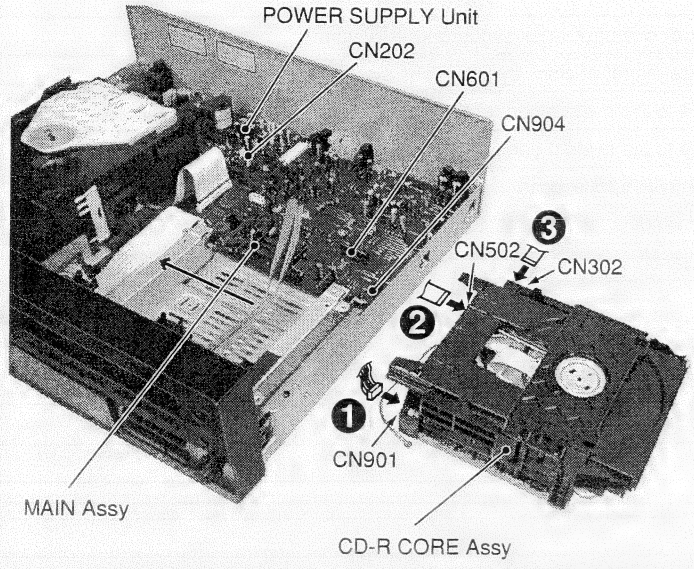

• Flexible Cables and Connector Assy for service
CD-R CORE Assy ↔ Other Assys

❶ CN901 ↔ CN202 (POWER SUPPLY Unit)
Connector Assy (6P) : PG06KK-F50

❷ CN502 ↔ CN601 (MAIN Assy)
25P FFC : PDD1227

❸ CN302 ↔ CN904 (MAIN Assy)
9P FFC : PDD1226

7.1.8 DIAGNOSIS OF CD-R CORE ASSY

When diagnosing the CD-R CORE Assy, use the following Flexible Cables and Connector Assys for service.

① Remove the CD-R CORE Assy. (Refer to the Disassembly of the CD-R CORE Assy and steps ① to ⑥ of the Servo Mechanism Block.

② Replace seven cables (❶ ~ ❻) for service and diagnose it.

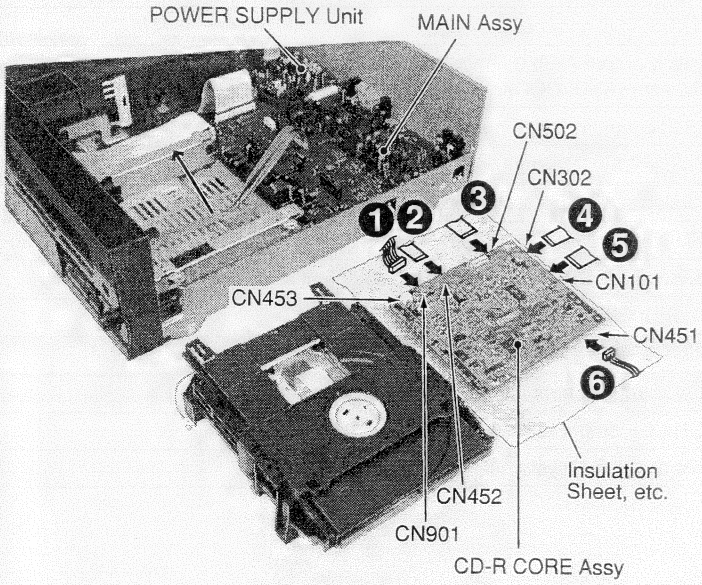

• Flexible Cables and Connector Assys for service
CD-R CORE Assy ↔ Other Assys

❶ CN901 ↔ CN202 (POWER SUPPLY Unit)
Connector Assy (6P) : PG06KK-F50

❷ CN452 ↔ CN601 (MECHA PCB Assy)
8P FFC/30v : PDD1225

❸ CN502 ↔ CN601 (MAIN Assy)
25P FFC : PDD1227

❹ CN302 ↔ CN904 (MAIN Assy)
9P FFC : PDD1226

❺ CN101 ↔ CN1 (CD-R Pickup)
32P FFC : PDD1224

❻ CN451 ↔ CN101 (LOAB Assy)
Connector Assy (3P) : PG03KK-E50

7.2 PARTS

• The information shown in the list is basic information and may not correspond exactly to that shown in the schematic diagrams.

7.2.1 IC

•List of IC

PE5190B, AK8567, BA5810FP, PDC069, PD5603A

■ PE5190B (CD-R CORE ASSY : IC301)

• Mechanism Control IC

•Pin Function(1/2)

No.	Mark	Pin Name	I/O	Pin Function
1	P32/XCLK0/SCL	MSCK	I/O	Serial transfer clock output of clock synchronous system
2	P33/SO0/SDA	MSO	I/O	Serial transfer data output of clock synchronous system
3	P34/TO0	SREQ	I	Serial hand shake to the system control IC input
4	P35/TO1	MACK	O	Serial hand shake to the system control IC output
5	P36/TO2	EECS	O	Enable output for EEPROM access
6	P37/TO3	XECE	O	Enable output for reading the jig for test
7	XRESET	XRESET	I	Reset input (L: Reset)
8	VDD1	Vdd1	–	+5V
9	X2	X2	–	Crystal input for system clock (32MHz)
10	X1	X1	–	Crystal output for system clock (32MHz)
11	VSS1	Vss1	–	GND
12	P00	APCDAC0	O	NC
13	P01	APCDAC1	O	NC
14	P02	APCDAC2	O	NC
15	P03	PW0	O	Recording laser power monitor Output (0)
16	P04	PW1	O	Recording laser power monitor Output (1)
17	P05	PW2	O	Recording laser power monitor Output (2)
18	P06	PW3	O	Recording laser power monitor Output (3)
19	P07	PW4	O(I)	Recording laser power monitor Output (4)
20	P67/XREFRQ/HLDAK	XRW	O	CD-RWreversing output (CD/CD-R: H, CD-RW: L)
21	P66/XWAIT/HLDRQ	CLOKDEC	O	CLOCK output for CXD2585Q command
22	P65/XWR	XWR	O	Strobe signal output for read operation of the external memory
23	P64/XRD	XRD	O	Strobe signal output for write operation of the external memory
24	P63/A19	XLATDEC	O	Latch output of CXD2585Q command
25	P62/A18	CLOKRF	O	When communicating output AK8567 exclusive use clock (CXD2585 ("H" fixation) (AKCLOOCK)
26	P61/A17	DATA	O	CXD2585Q/AK8567 common DATA output (SSO)
27	P60/A16	XLATRF	O	AK8567 exclusive use LATCH output for AK8567 command
28	P57/A15	XTERST	O	Tracking error envelope detection reset output
29	P56/A14	ECLV	O	Spindle servo EFMCLV mode switch output
30	P55/A13	CLV	O	Spindle servo CAV and WOBBLE CLV mode switch output
31	P54/A12	GAINUP	O	GAIN set switch output for CD-RW (CD-RW="H")
32	P53/A11	AGCON	O	WOBBLE extraction AGC circuit ON/OFF switch output
33	P52/A10	CDROPC	O	Signal output for AC circuit control for CD-R running OPC
34	P51/A9	LDON	O	LASER DIODE ON/OFF output (ON="H")
35	P50/A8	LRST	O	Reset for the servo and digital system ICs (L : Reset)
36	P47/AD7	AD7	O	Data address line
37	P46/AD6	AD6		
38	P45/AD5	AD5		
39	P44/AD4	AD4		
40	P43/AD3	AD3		

•Pin Function(2/2)

No.	Mark	Pin Name	I/O	Pin Function
41	P42/AD2	AD2	O	Data address line
42	P41/AD1	AD1		
43	P40/AD0	AD0		
44	ASTB/CLKOUT	ASTB	O	External latch signal of lower address signal for external memory access
45	Vss0	GNDD	–	GNDD
46	TEST	GNDD	–	GNDD
47	P10/PWM0	VWDSW	O	Laser driver time constant switch output for WRIT (H:ON,L:OFF)
48	P11/PWM1	TMODE	O	TEST MODE output (TEST MODE:H)
49	P12/ASCK2/XSCK2	QCLK	O	CLOCK output for CXD2585Q sub-Q reading
50	P13/RXD2/SI2	QDATA	I	DATA output for CXD2585Q sub-Q reading
51	P14/TXD2/SO2	N.C	O	-
52	P15	XRFDET	I	EFM playback RF detection
53	P16	FOK	I	FOCUS OK input (L : Focus OK)
54	P17	XCD	O	CD/other switch output (CD="L")
55	Vdd0	Vdd0	–	+5V
56	P70/ANI0	MPXTEST	I(A)	AK8567 MPX input (various data for servo system adjustment)
57	P71/ANI1	WRFPH	I(A)	A OUT input (running OPC)
58	P72/ANI2	WRFSH	I(A)	B OUT input (running OPC)
59	P73/ANI3	TERM	I(A)	Temperature sensor input
60	P74/ANI4	RFB	I(A)	Playback RF lower side envelope input
61	P75/ANI5	RFT	I(A)	Playback RF upper part envelope input
62	P76/ANI6	M11	I(A)	CDRMR1 (RF upper part (envelope without coupling) input (for modulation degree calculation)
63	P77/ANI7	TRAY	I(A)	LOADING POSITION input (OPEN="L")
64	Avdd	AVdd	–	+5V
65	Avref1	AVref1	–	+4.5V
66	Avss	AVss	–	GNDA
67	ANO0	VWDC2	O(A)	CD-R OverDrive/CD-RW record power output (0)
68	ANO1	DA1	O(A)	CD-R OverDrive/CD-RW record power output (1)
69	Avref2	AVref2	–	+4.5V
70	Avref3	AVref3	–	GNDA
71	P20/NMI	XPFAIL	I	Power failure detection
72	P21/INTP0	XINT1	I	The EFM ENCODER SYNC1 detection (detection interrupt and the synchronous demand interrupt of RF,etc).
73	P22/INTP1	XINT2	I	The EFM ENCODER SYNC1 detection
74	P23/INTP2/C1	ATIPSYNC	I	ATIP FLAME SYNC detection
75	P24/INTP3	SCOR	I	EFM DECODER FLAME SYNC detection
76	P25/INTP4/ASCK	FG	I	SPINDLE FG detection
77	P26/INTP5	SENS	I	SENS input
78	P27/SI0	MSI	I	Synchronous serial transfer data input
79	P30/RXD/SI1	SCLK	O	CLOCK output for CXD2585Q serial READ OUT reading
80	P31/TXD/SO1	N.C	O	-

Note: (A) in item I/O shows "ANALOG".

■ AK8567 (CD-R CORE ASSY : IC101)

• **RF Processor**

•Pin Function(1/3)

No.	Pin Name	I/O	Pin Function
1	AVDD3	I	Analog, positive power source pin
2	BCENT	O	Central signal output pin
3	PHBETA	O	ß signal top level output pin
4	BHBETA	O	ß signal bottom level output pin
5	PHBTC	O	External capacitor connector pin for PHBETA droop rate setting
6	BHBTC	O	External capacitor connector pin for PHBETA droop rate setting
7	MPP	O	Main push-pull signal output pin
8	TEIN	I	Input pin for tracking signal processing circuit
9	TE	O	Tracking error signal output pin
10	FE	O	Focus error signal output pin
11	SBAD	O	SBAD signal output pin
12	TZCLVL	I	Comparate level input pin for tracking zero cross
13	VREF	I/O	Decoupling pin for internal reference voltage/reference voltage input pin
14	AGND1	O	Decoupling terminal for internal reference voltage
15	BIAS	O	Bias resistance connector pin (Bias=4.7kΩ)
16	VSS	I	Analog ground pin
17	FVREF	I	Reference voltage input pin for APC
18	FPD0	I	Laser monitor output pin
19	RREF	I/O	Power setting voltage input pin for Read APC/built-in DAC setting voltage
20	VRDC	O	Laser driver control output pin for Read
21	VRDCN	I	Laser driver control amp.(-) pin for Read
22	VRDCN2	I	Laser driver time constant setting pin for Read
23	WREF	I/O	Power setting voltage input pin for write APC/built-in DAC seting voltage output pin
24	WDA0	O	Power setting for write APC built-in DAC voltage output pin
25	AVDD2	I	Analog, positive power source pin
26	AVSS2	I	Analog ground pin
27	VWDC	O	Laser driver control output pin for Write
28	VWDCN2	I	Laser driver time constant setting pin for Write
29	VWDCN	I	Laser driver control amp.(-) pin for Write
30	ATFM	O	Wobble signal output pin
31	AGC1C	O	External capacitor connector pin for AGC1 responce speed setting
32	AGC2C	O	External capacitor connector pin for AGC2 responce speed setting
33	AGV3C	O	External capacitor connector pin for AGC3 responce speed setting
34	AGND2	O	Decoupling pin for internal reference voltage
35	VSS	I	Analog ground pin
36	SGAINDN	I	Gain switch control signal input pin
37	GAINUP	I	CD-RW switch control siganl input pin
38	AGCON	I	Wobble AGC enable siganl input pin ("H" AGC ON, "L" AGC reset)
39	ATFG	O	ATIP FG (digital wobble siganl)output pin
40	XTOR	O	Tracking amplitude detection signal output pin
41	XTAND	O	Off tracking detection siganl output pin
42	TZC	O	Tracking zero cross detection signal output pin

●Pin Function(2/3)

No.	Pin Name	I/O	Pin Function
43	RECD2	I	Recorded area detection signal output pin2 ("H" recorded, "L" unrecorded)
44	RECD1	O	Recorded area detection signal output pin1 ("H" recorded, "L" unrecorded)
45	RC	O	RC signal output pin
46	DFCT	I	DFCT signal output pin
47	MIRR	I	MIRR signal output pin
48	MCLK1	I	Main clock input pin1 (input sine wave)
49	MCLK2	I	Main clock input pin2 (input sine wave)
50	DVSS	I	Digital ground pin
51	DVDD	I	Digital power source pin
52	FOK	I	FOk signal output pin
53	RZC	I	RF zero cross detection signal output pin
54	MPDSH	I	Sample pulse input pin for main beam signal ("H" sample, "L" hold)
55	SPDSH	I	Sample pulse input pin for side beam signal ("H" sample, "L" hold)
56	REPDSH	I	Sample pulse input pin for Read APC ("H" sample, "L" hold)
57	WFPDSH	I	Sample pulse input pin for Write APC ("H" sample, "L" hold)
58	WLDON	I	Write laser diode control signal input pin ("L" Write APC setting to zero, "H" laser diode ON)
59	RLDON	I	Read laser diode control signal input pin ("L" Read APC setting to zero, "H" laser diode ON)
60	SPBLVL	I	BLEVEL signal sample pulse pulse input pin ("H" sample, "L" hold)
61	SPRFTR	I	WRFTR signal sample pulse pulse input pin ("H" sample, "L" hold)
62	VWDSW	I	Laser driver time constant switch control signal input pin for Write ("H" ON, "L" OFF)
63	VRDSW	I	Laser driver time constant switch control signal input pin for Read ("H" ON, "L" OFF)
64	RSBETA	I	ß measurement circuit reset pin ("H" PHBETA,BHBETA output to Reset)
65	SCLK	I	Clock input pin for register setting
66	SDATA	I	Data input pin for register setting
67	XLAT	I	Latch signal input pin for register setting
68	XRST	I	Register reset pin ("L" initialize registers)
69	VSS	I	Analog ground pin
70	OSTCC	O	External CAP connector pin for EQ output offset cancelor fc setting
71	AGCC	O	External CAP connector pin for RFAGC response speed setting
72	PHD2C	O	External CAP connector pin for P/H2 Droop rate setting
73	RCCMPI	I	Comparator input pin for RC detection
74	PBH0	O	RRF signal bottom/top level output pin
75	AVDD1	I	Analog, positive power suorce pin
76	AVSS1	I	Analog ground pin
77	RRFTOP	O	RRF signal peak level output pin
78	RRFBTM	O	RRF signal bottom level output pin
79	NC	-	-
80	EQRF	O	Equalizer filter output pin
81	NC	-	-
82	AUX1	I	Auxilialy input pin for signal monitoring 1
83	AUX2	I	Auxilialy input pin for signal monitoring 2
84	AUX3	I	Auxilialy input pin for signal monitoring 3
85	MPXOUT	O	Multiplexer output pin for signal monitoring

•Pin Function(3/3)

No.	Pin Name	I/O	Pin Function
86	RRFVC	I	Level shift voltage input pin for signal monitoring
87	RECDIN	I	RF input pin for Recorded area detection
88	RRF	O	Read RF signal output pin
89	WRF	O	Write RF signal output pin
90	VSS	I	Analog ground pin
91	AIN	I	Main beam signal (A) input pin
92	BIN	I	Main beam signal (B) input pin
93	CIN	I	Main beam signal (C) input pin
94	DIN	I	Main beam signal (D) input pin
95	EIN	I	Main beam signal (E) input pin
96	FIN	I	Main beam signal (F) input pin
97	GIN	I	Main beam signal (G) input pin
98	HIN	I	Main beam signal (H) input pin
99	HAVC	I	Main/side beam signal reference voltage input pin
100	AVSS3	I	Analog ground pin

■ BA5810FP (CD-R CORE ASSY : IC451)

- 5Channel Driver IC

●Block Diagram

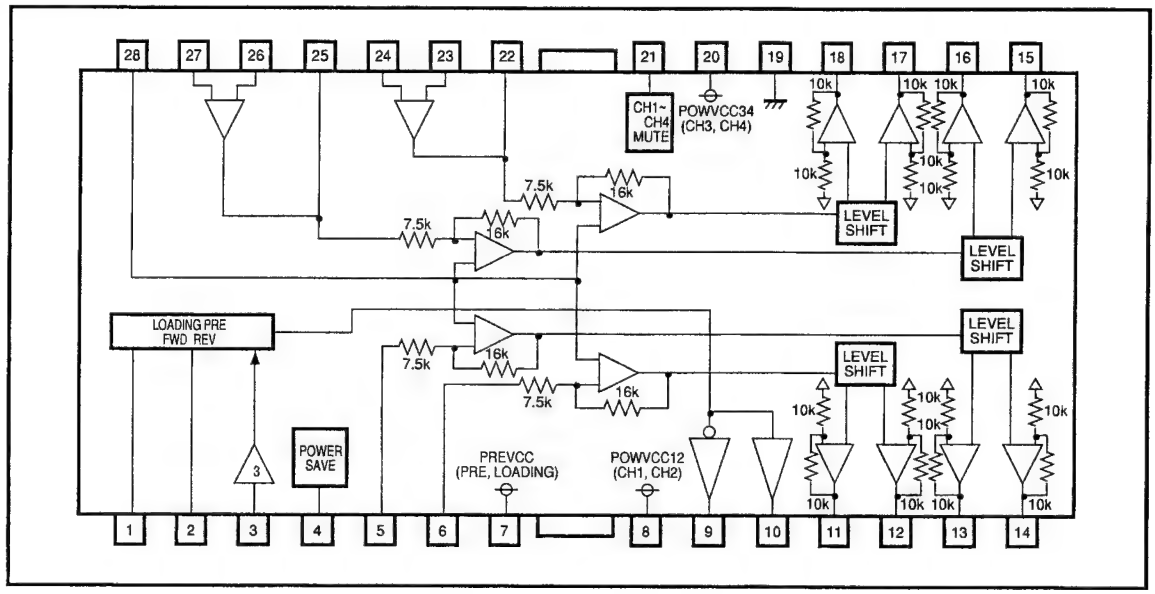

●Pin Function

No.	Pin Name	Pin Function	No.	Pin Name	Pin Function
1	FWD	Input for loading forward	15	V04(+)	Not inverted output of CH4
2	REV	Input for loading reverce	16	V04(-)	Inverted output of CH4
3	LDCONT	Output control terminal for loading	17	V03(+)	Not inverted output of CH3
4	PS	Control terminal for power saving mode	18	V03(-)	Inverted output of CH3
5	IN1	Input of CH2	19	GND	Substrate ground
6	IN2	Input of CH1	20	POWVCC34	Power unit power supply input terminal (CH3,CH4)
7	PREVCC	Pre and loading unit power supply input terminal	21	MUTE	Input for mute control
8	POWVCC12	Power unit power supply input terminal	22	OPOUT3	Output of CH3 OP-AMP
9	VOL(-)	Inverted output of loading	23	OPIN3(-)	Inverting iutput of CH3 OP-AMP
10	VOL(+)	Not inverted output of loading	24	OPIN3(+)	Not inverting iutput of CH3 OP-AMP
11	V02(-)	Inverted output of CH2	25	OPOUT4	Output of CH4 OP-AMP
12	V02(+)	Not inverted output of CH2	26	OPIN4(-)	Inverting iutput of CH4 OP-AMP
13	V01(-)	Inverted output of CH1	27	OPIN4(+)	Not inverting iutput of CH4 OP-AMP
14	V01(+)	Not inverted output of CH2	28	BIAS	Input of Bias-amplifier

■ PDC069 (CD-R CORE ASSY : IC501)

• Encoder IC

•Pin Function(1/5)

No.	Signal	TYPE	COMMENT
1	DVss	P	Digital system ground (VSS)
2	RA5	O	Address lines for the audio data delay buffer DRAM
3	RA4	O	
4	RA3	O	
5	RA2	O	
6	RA1	O	
7	RA0	O	
8	DVdd	P	Digital system power supply (5V)
9	DVss	P	Digital system ground (VSS)
10	I07	B	Data lines with pull-up resistor for the audio data delay buffer DRAM
11	I06	B	
12	I05	B	
13	I04	B	
14	I03	B	
15	I02	B	
16	DVdd	P	Digital system power supply (3.3V)
17	DVss	P	Digital system ground (VSS)
18	I01	B	Data lines with pull-up resistor for the audio data delay buffer DRAM
19	I00	B	
20	I015	B	
21	I014	B	
22	I013	B	
23	I012	B	
24	I011	B	
25	I010	B	
26	I09	B	
27	I08	B	
28	DVdd	P	Digital system power supply (5V)
29	ENCCK1T	O	1T clock output for write strategy (4.3218MHz when x1-speed)
30	EFMIN	I	EFM signal for recoding directly.
31	PUSEL	I	Pickup select (0 : SANYO method、1 : PIONEER method)
32	EFMG	O	EFM output control signal
33	WRITE	I	Write Strategy signal control
34	DVdd	P	Digital system power supply (3.3V)
35	DVss	P	Digital system ground (VSS)
36	CMOD	O	Write Strategy output signal
37	REWLDON	O	
38	WLDON	O	
39	CFREQ	O	
40	SSP2	O	Servo sampling pulse output

●Pin Function(2/5)

No.	Signal	TYPE	COMMENT
41	SSP1	O	Servo sampling pulse output
42	RAPC	O	Laser sampling pulse output
43	WAPC	O	
44	H11TO	O	Running OPC Sampling pulse
45	LDH	O	Recoding LD control signal
46	ATEST3	O	Analog block test output
47	ATEST1	O	
48	WDAT	O	Recoding LD control signal
49	NWDAT	O	Recoding LD control signal
50	DVdd	P	Digital system power supply (5V)
51	DVss	P	Digital system ground (Vss)
52	AVdd	P	Analog system power supply 3.3V (Write Strategy)
53	AVss	P	Analog system ground (Vss)
54	R1	I	Write Strategy analog signal
55	VCNT1	I	
56	MDC1	O	
57	PDO1	O	
58	ENCCKOUT	O	RF processor clock output (34.5744MHz or 17.2872MHz)
59	CDCKOUT2	O	CD decoder clock output (33.8688MHz or 16.9344MHz)
60	CDCKOUT	O	CD decoder clock output (33.8688MHz or 16.9344MHz)
61	DVss	P	Digital system ground (Vss)
62	DACCKOUT	O	External D/A converter clock output (33.8688MHz or 16.9344MHz)
63	ADCCKOUT	O	External A/D converter clock output (33.8688MHz or 16.9344MHz)
64	DVdd	P	Digital system power supply (5V)
65	AUXMCKIN	I	External clock input
66	XTALCK	I	Crystal oscillator circuit input (33.8688MHz)
67	XTAL	O	Crystal oscillator circuit output
68	AVdd	P	Analog system power supply 3.3V (PLL)
69	AVss	P	Analog system ground(Vss) (PLL)
70	PDOO	O	PLL analog signals
71	VCNTO	I	
72	RO	I	
73	ROUT	O	Internal D/A converter output
74	AVdd	P	Analog system power supply 5V (Internal D/A converter)
75	AVss	P	Analog system ground(Vss) (Internal D/A converter)
76	LOUT	O	Internal D/A converter output
77	DACBCK	O	Internal D/A converter BCK signal output
78	DACDATA	O	Internal D/A converter DATA signal output
79	DACLRCK	O	Internal D/A converter LRCK signal output
80	DVdd	P	Digital system power supply 3.3V
81	DVss	P	Digital system ground (Vss)
82	ADCSTBY	O	External A/D converter standby signal output
83	ADCBCK	O	External A/D converter BCK signal output
84	ADCLRCK	O	External A/D converter LRCK signal output
85	ADCDATA	I	External A/D converter DATA signal input
86	DVdd	P	Digital system power supply 5V
87	DVss	P	Digital system ground (Vss)
88	AUXBCK	I	External BCK signal input

●Pin Function(3/5)

No.	Signal	TYPE	COMMENT
89	AUXDATA	I	External DATA signal input
90	AUXLRCK	I	External LRCK signal input
91	AUXTX	I	DIT DATA signal input
92	Reserve0	O	Reserved
93	Reserve1	O	
94	Reserve2	O	
95	Reserve3	O	
96	Reserve4	O	
97	Reserve5	O	
98	Reserve6	O	
99	Reserve7	O	
100	Reserve8	O	
101	Reserve9	O	
102	DVdd	P	Digital system power supply (5V)
103	SRSTNBY	I	Internal SRAM standby signal input.
104	AVdd	P	Analog system power supply(3.3V) (Internal SRAM)
105	AVss	P	Analog system power supply(Vss) (Internal SRAM)
106	MON1	O	Monitor outputs
107	MON2	O	
108	MON3	O	
109	MON4	O	
110	TEST0	I	TEST signal inputs These pins must be tied to ground (VSS) in normal operation.
111	TEST1	I	
112	TEST2	I	
113	TEST3	I	
114	TEST4	I	
115	TESTIN	I	
116	TESTOUT	O	TEST signal output : This pin must be open in normal operation.
117	DITOUT	O	DIT data output
118	DVdd	P	Digital system power supply (3.3V)
119	DVss	P	Digital system ground (Vss)
120	DVdd	P	Digital system power supply (5V)
121	DVss	P	Digital system ground (Vss)
122	ZRFDET	I	RF detection signal input
123	EFMSYNC	O	7.35kHz(x1)
124	SUBSYNC	O	Subcode synchronization signal
125	FGIN	I	CAV servo FG input
126	SPDO	O	Spindle output
127	CRCOK	O	ATIP-CRC checked result output
128	ATIPSYNC	O	ATIPSYNC signal output
129	BIDATA	B	Bi-phase data input and output signal
130	BICLK	B	Bi-phase clock input and output signal
131	WOBBLE	I	WOBBLE Bi-phase signal
132	DVdd	P	Digital system power supply (3.3V)
133	DVss	P	Digital system ground (Vss)
134	CDBCK	I	CD BCK input

●Pin Function(4/5)

No.	Signal	TYPE	COMMENT
135	CDDATA	I	CD serial data input
136	CDLRCK	I	CD LRCK input
137	CDTX	I	DIT data input
138	DVdd	P	Digital system power supply (5V)
139	DVss	P	Digital system ground (Vss)
140	ENCERR	O	Encoder error signal output
141	JITERR	O	CJS error signal output
142	DIRERR	O	PLL lock and data error signal output
143	AVss	P	Analog system ground(Vss) (CJS block)
144	AVdd	P	Analog system power supply(3.3V) (CJS block)
145	JITPCO	O	PLL, phase and frequency comparator output
146	JITLPFI	I	PLL, low pass filter input
147	JITLPFO	O	PLL, low pass filter output
148	JITVCOIN	I	PLL, VCO clock input
149	AVss	P	Analog system ground(Vss) (CJS block)
150	AVdd	P	Analog system power supply(5V) (CJS block)
151	DIRRS	I	VCO gain control input
152	DIRVCO	I	VCO free running oscillator frequency control input
153	DIRLPF	O	Loop filter setting
154	AVdd	P	Analog system power supply(3.3V) (DIR block)
155	AVss	P	Analog system ground(Vss) (DIR block)
156	DVdd	P	Digital system power supply (5V)
157	DVss	P	Digital system ground (Vss)
158	DIN1	I	Digital data inputs
159	DIN2	I	
160	DIN3	I	
161	DIN4	I	
162	DVdd	P	Digital system power supply (3.3V)
163	SUA0	I	Command resister selection address
164	SUA1	I	
165	SUA2	I	
166	SUA3	I	
167	SUA4	I	
168	SUA5	I	
169	SUA6	I	
170	SUA7	I	
171	ZINT	O	Interrupt request output to the micro controller
172	DVdd	P	Digital system power supply (5V)
173	DVss	P	Digital system ground (Vss)
174	DVdd	P	Digital system power supply (3.3V)
175	DVss	P	Digital system ground (Vss)

•Pin Function(5/5)

No.	Signal	TYPE	COMMENT
176	D0	B	Micro controller data lines with Pull up resister
177	D1	B	
178	D2	B	
179	D3	B	
180	D4	B	
181	D5	B	
182	D6	B	
183	D7	B	
184	ZRD	I	Micro controller data read signal input
185	ZWR	I	Micro controller chip select signal input
186	ZCS	I	Micro controller data write signal input
187	ZRESET	I	System reset
188	DVdd	P	Digital system power supply (3.3V)
189	DVss	P	Digital system ground (Vss)
190	DVdd	P	Digital system power supply (5V)
191	DVss	P	Digital system ground (Vss)
192	Reserve10	O	Reserve
193	Reserve11	O	
194	SBDATA	B	Subcode interface serial data signal
195	CLCK	B	Subcode interface data shift clock signal
196	SFSY	B	Subcode interface frame sync signal
197	SBSY	B	Subcode interface block sync signal
198	DVdd	P	Digital system power supply (5V)
199	DVss	P	Digital system ground (Vss)
200	ZWE	O	Write Enable signal output for the audio data delay buffer DRAM
201	ZRAS	O	RAS signal output for the audio data delay buffer DRAM
202	ZCAS	O	CAS signal output for the audio data delay buffer DRAM
203	ZOE	O	Read Enable signal output for the audio data delay buffer DRAM
204	ZINT2	O	Interrupt request output to the micro controller
205	RA8	O	Address lines for the audio data delay buffer DRAM
206	RA7	O	
207	RA6	O	
208	DVdd	P	Digital system power supply (5V)

■ PD5603A (MAIN ASSY : IC901)

• System Control IC

●Pin Function

No.	Mark	Pin Name	I/O	Pin Function
1	SOUT4	FLDI	O	Serial data output for FL driver
2	CLK4	FLCL	O	Serial clock output for FL driver
3	P94	SELI-	O	3CD Mecha select drive control
4	P93	SELINIT	I	3CD Mecha SW(Initail Select position detect)
5	P92	SELECT	I	3CD Mecha SW(Select position detect)
6	P91	CLAMP	I	3CD Mecha SW(CLAMP END detect)
7	P90	HOME	I	3CD Mecha SW(Tray position detect)
8	BYTE	VSS	I	Connect to GND
9	CNVSS	CNVSS	I	Pull-down connect to GND
10	XCIN	XCIN	I	Stand-by for HCMS
11	XCOUT	XCOUT	O	Stand-by for HCMS
12	^RESET	RESET	I	System reset input
13	XOUT	XOUT	O	System oscillation 16MHz
14	VSS	VSS	I	Connect to GND
15	XIN	XIN	I	System oscillation 16MHz
16	VCC	VCC	I	Connect to VDD
17	P85	VCC	I	Connect to VDD
18	INT2	KEYCK	I	Key Board input
19	INT1	REMIN	I	Remote control input
20	INT0	MACK	I	Commmunication permission form MECHA controller
21	P81	NC	O	Not used (L outputs)
22	P80	NC	O	Not used (L outputs)
23	P77	NC	O	Not used (L outputs)
24	P76	NC	O	Not used (L outputs)
25	P75	KEYDATA	I	Key Board input
26	P74	XOPT	O	Optical input (ON/OFF SW)
27	P73	HP_ATT	O	Headphone attenuator change SW
28	P72	SXMUTE	O	System MUTE
29	P71	NC	O	Not used (L outputs)
30	P70	NC	O	
31	TXD(at FLASH)	FLASH TXD1	I	Not used (Flash write)
32	RXD(at FLASH)	FLASH RXD1	I	
33	CLK(at FLASH)	FLASH CLK1	I	
34	RTS(at FLASH)	FLASH RTS1	O	
35	TXD0	MSI	O	Serial communication output with the MECHA controller
36	RXD0	MSO	I	Serial communication input with the MECHA controller
37	CLK0	SSCK	O	Serial communication clock with the MECHA controller
38	P60	SREQ	O	Request for MECHA controller communication
39	P57	NC	O	Not used (L outputs)
40	P56	MRESET	O	MECHA controller reset output

No.	Mark	Pin Name	I/O	Pin Function
41	EPM(at FLASH)	GND	I	GND (Flash write)
42	P54	NC	O	Not used (L outputs)
43	P53	EEPCLK	O	Clock output for EEPROM
44	P52	EEPDATA	O	Data output for EEPROM
45	P51	URAROKU	O	Simultaneous recording ON/OFF SW
46	CE(at FLASH)	V+5DSM	I	VDD (Flash write)
47	P47	NC	O	Not used (L outputs)
48	P46	NC	O	Not used (L outputs)
49	P45	SWAMP	O	Internal/External input OP amp change SW
50	P44	BAISOKU	O	Playback speed change SW of CD normal-double speed (L: double speed)
51	P43	NC	O	Not used (L outputs)
52	P42	NC	O	
53	P41	XTEST	I	Test Terminal for the Checker
54	P40	DIR_SEL	I	D.IN × 2 select SW for ELITE model (H: 2)
55	P37	RENTAL	I	Rental copy existence select SW (H:rental copy exist)
56	P36	NC	O	Not used (L outputs)
57	P35	NC	O	
58	P34	LEGATO	I	Legato existence (H:legato exist)
59	P33	HIBIT	I	High-Bit existence (H:High-Bit exist)
60	P32	DEMO	I	DEMO display select SW
61	P31	KANA_TEXT	I	Key Board select SW
62	VCC	VCC	I	Connect to VDD
63	P30	NC	O	Not used (L outputs)
64	VSS	VSS	I	Connect to GND
65	P27	NC	O	Not used (L outputs)
66	P26	NC	O	
67	P25	FLCE	O	Latch output for FL DRIVER
68	P24	FLRST	O	Reset output for FL DRIVER (L:reset)
69	P23	LEDR	O	LED light output of COPY START key (H:light)
70	P22	LEDCD3	O	LED light output of CD SELECT3 key (H:light)
71	P21	LEDCD2	O	LED light output of CD SELECT2 key (H:light)
72	P20	CDSLEEP	O	CD power(LSI oscillation) control
73	P17	NC	O	Not used (L outputs)
74	INT4	XPFAIL	I	Stop power supply detect (external interrupt)
75	P15	ENC1	I	Rotary encoder input
76	P14	LEDCD1	O	LED light output of CD SELECT1 key (H:light)
77	P13	ENC2	I	Rotary encoder input
78	P12	LEDVOL	O	LED light output of REC VOL fixed (H:light)
79	P11	CDXRST	O	Reset output for CD RECORDER, MOTOR DRIVER
80	P10	CDMUTE2	O	CD DRIVER MUTE

No.	Mark	Pin Name	I/O	Pin Function
81	P07	XCDCE	O	CD chip enable output
82	P06	CDBUCK	O	CD Bus clock output
83	P05	CDBUS0	I/O	CD Bus clock output
84	P04	CDBUS1	I/O	
85	P03	CDBUS2	I/O	
86	P02	CDBUS3	I/O	
87	P01	LOADIN	O	3CD mechanism loading drive control
88	P00	LOADOUT	O	
89	P107	CDINSIDE	I	3CD mechanism SW (PU most inner side) (L:PU most inner side)
90	P106	CDOPEN	I	3CD mechanism SW (L: CD tray open end)
91	P105	CDCLOSE	I	3CD mechanism SW (L: CD tray close end)
92	P104	SELI+	O	3CD mechanism select drive control
93	AN3	KEYAD1	I	Key A/D input
94	AN2	KEYAD3	I	
95	AN1	KEYAD2	I	
96	AVSS	VSS	I	Connect to GND
97	P100	NC	O	Not used (Loutputs)
98	VREF	VCC	I	Connect to VDD
99	AVCC	VCC	I	
100	P97	NC	O	Not used (Loutputs)

7.2.2 DISPLAY

■ PEL1102 (OPERATING 1 ASSY : V701)

• FL Display

• External Dimensions

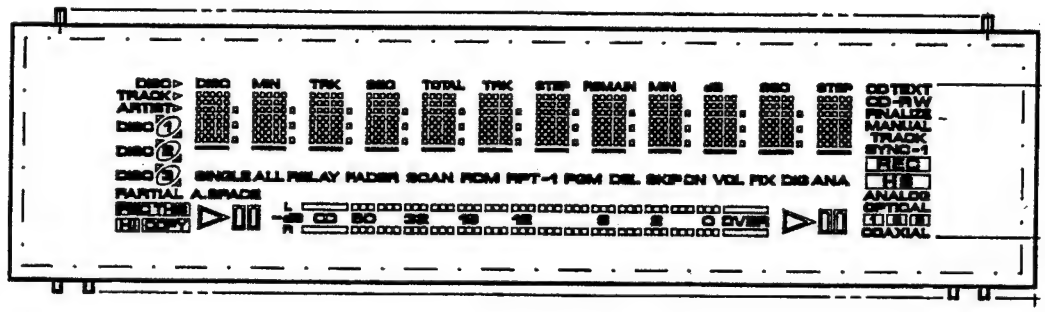

• Pin Assignment

PIN NO.	54 53 52 51 50 49 48 47 46 45 44 43 42 41 40 39 38 37 36 35 34 33 32 31 30 29 28 27 26 25 24 23 22 21 20 19 18 17 16 15 14 13 12 11 10 9 8 7 6 5 4 3 2 1
CONNECTION	1G 2G 3G 4G 5G 6G 7G 8G 9G 10G 11G 12G 13G 14G 15G P00 P01 P02 P03 P04 P05 P06 P07 P08 P09 P10 P11 P12 P13 P14 P15 P16 P17 P18 P19 P20 P21 P22 P23 P24 P25 P26 P27 P28 P29 P30 P31 NP NP FIL1 FIL2

PIN NO.	62 61 60 59 58 57 56 55 54 53 52 51
CONNECTION	FIL2 FIL1 NP NP 1G 2G 3G 4G 5G 6G 7G 8G

• Anode and Grid Assignment

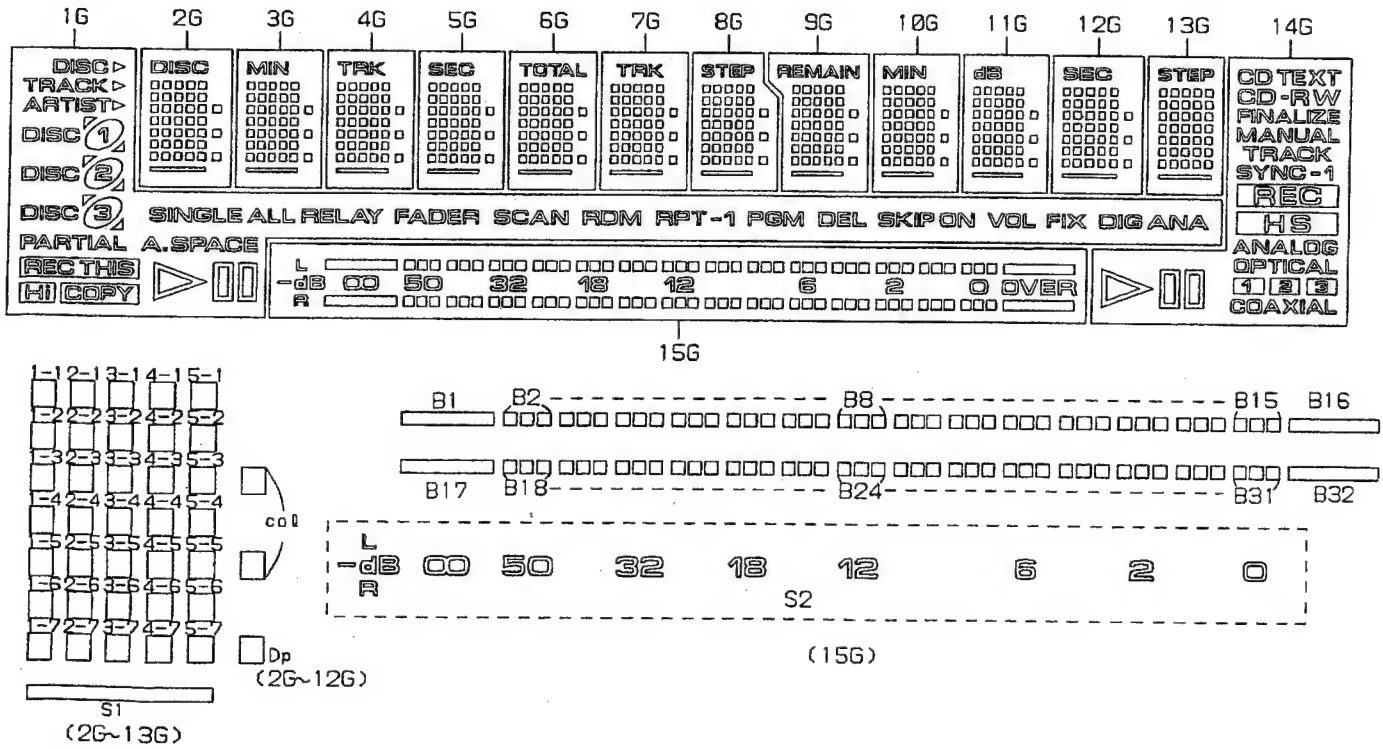

	1G	2G	3G	4G	5G	6G	7G	8G	9G	10G	11G	12G	13G	14G	15G
P1	▯▯	1-1	1-1	1-1	1-1	1-1	1-1	1-1	1-1	1-1	1-1	1-1	1-1	–	B1
P2	▷	2-1	2-1	2-1	2-1	2-1	2-1	2-1	2-1	2-1	2-1	2-1	2-1	–	B2
P3	COPY	3-1	3-1	3-1	3-1	3-1	3-1	3-1	3-1	3-1	3-1	3-1	3-1	–	B3
P4	Hi	4-1	4-1	4-1	4-1	4-1	4-1	4-1	4-1	4-1	4-1	4-1	4-1	–	B4
P5	REC THIS	5-1	5-1	5-1	5-1	5-1	5-1	5-1	5-1	5-1	5-1	5-1	5-1	–	B5
P6	A.SPACE	1-2	1-2	1-2	1-2	1-2	1-2	1-2	1-2	1-2	1-2	1-2	1-2	–	B6
P7	PARTIAL	2-2	2-2	2-2	2-2	2-2	2-2	2-2	2-2	2-2	2-2	2-2	2-2	–	B7
P8	DISC ▷	3-2	3-2	3-2	3-2	3-2	3-2	3-2	3-2	3-2	3-2	3-2	3-2	–	B8
P9	TRACK ▷	4-2	4-2	4-2	4-2	4-2	4-2	4-2	4-2	4-2	4-2	4-2	4-2	–	B9
P10	ARTIST ▷	5-2	5-2	5-2	5-2	5-2	5-2	5-2	5-2	5-2	5-2	5-2	5-2	–	B10
P11	DISC (1)	1-3	1-3	1-3	1-3	1-3	1-3	1-3	1-3	1-3	1-3	1-3	1-3	–	B11
P12	①	2-3	2-3	2-3	2-3	2-3	2-3	2-3	2-3	2-3	2-3	2-3	2-3	–	B12
P13	◿ (1)	3-3	3-3	3-3	3-3	3-3	3-3	3-3	3-3	3-3	3-3	3-3	3-3	–	B13
P14	DISC (2)	4-3	4-3	4-3	4-3	4-3	4-3	4-3	4-3	4-3	4-3	4-3	4-3	–	B14
P15	②	5-3	5-3	5-3	5-3	5-3	5-3	5-3	5-3	5-3	5-3	5-3	5-3	–	B15
P16	◿ (2)	1-4	1-4	1-4	1-4	1-4	1-4	1-4	1-4	1-4	1-4	1-4	1-4	–	B16
P17	DISC (3)	2-4	2-4	2-4	2-4	2-4	2-4	2-4	2-4	2-4	2-4	2-4	2-4	CD TEXT	B17
P18	③	3-4	3-4	3-4	3-4	3-4	3-4	3-4	3-4	3-4	3-4	3-4	3-4	CD	B18
P19	◿ (3)	4-4	4-4	4-4	4-4	4-4	4-4	4-4	4-4	4-4	4-4	4-4	4-4	-R	B19
P20	SINGLE	5-4	5-4	5-4	5-4	5-4	5-4	5-4	5-4	5-4	5-4	5-4	5-4	W	B20
P21	ALL	1-5	1-5	1-5	1-5	1-5	1-5	1-5	1-5	1-5	1-5	1-5	1-5	FINALIZE	B21
P22	RELAY	2-5	2-5	2-5	2-5	2-5	2-5	2-5	2-5	2-5	2-5	2-5	2-5	MANUAL	B22
P23	FADER	3-5	3-5	3-5	3-5	3-5	3-5	3-5	3-5	3-5	3-5	3-5	3-5	TRACK	B23
P24	SCAN	4-5	4-5	4-5	4-5	4-5	4-5	4-5	4-5	4-5	4-5	4-5	4-5	SYNC	B24
P25	RDM	5-5	5-5	5-5	5-5	5-5	5-5	5-5	5-5	5-5	5-5	5-5	5-5	-1	B25
P26	RPT	1-6	1-6	1-6	1-6	1-6	1-6	1-6	1-6	1-6	1-6	1-6	1-6	REC	B26
P27	-1	2-6	2-6	2-6	2-6	2-6	2-6	2-6	2-6	2-6	2-6	2-6	2-6	HS	B27
P28	PGM	3-6	3-6	3-6	3-6	3-6	3-6	3-6	3-6	3-6	3-6	3-6	3-6	ANALOG	B28
P29	DEL	4-6	4-6	4-6	4-6	4-6	4-6	4-6	4-6	4-6	4-6	4-6	4-6	OPTICAL	B29
P30	SKIP	5-6	5-6	5-6	5-6	5-6	5-6	5-6	5-6	5-6	5-6	5-6	5-6	1	B30
P31	ON	1-7	1-7	1-7	1-7	1-7	1-7	1-7	1-7	1-7	1-7	1-7	1-7	2	B31
P32	VOL	2-7	2-7	2-7	2-7	2-7	2-7	2-7	2-7	2-7	2-7	2-7	2-7	3	B32
P33	FIX	3-7	3-7	3-7	3-7	3-7	3-7	3-7	3-7	3-7	3-7	3-7	3-7	COAXIAL	S2
P34	DIG	4-7	4-7	4-7	4-7	4-7	4-7	4-7	4-7	4-7	4-7	4-7	4-7	▯▯	OVER
P35	ANA	5-7	5-7	5-7	5-7	5-7	5-7	5-7	5-7	5-7	5-7	5-7	5-7	▷	–
P36	–	Dp	Dp	Dp	Dp	Dp	Dp	Dp	Dp	Dp	Dp	Dp	–	–	–
P37	–	col	col	col	col	col	col	col	col	col	col	col	–	–	–
P38	–	DISC	MIN	TRK	SEC	TOTAL	TRK	STEP	REMAIN	MIN	dB	SEC	STEP	–	–
P39	–	S1	S1	S1	S1	S1	S1	S1	S1	S1	S1	S1	S1	–	–

PDR-W839

8. PANEL FACILITIES AND SPECIFICATIONS

8.1 PANEL FACILITIES

■ Front Panel

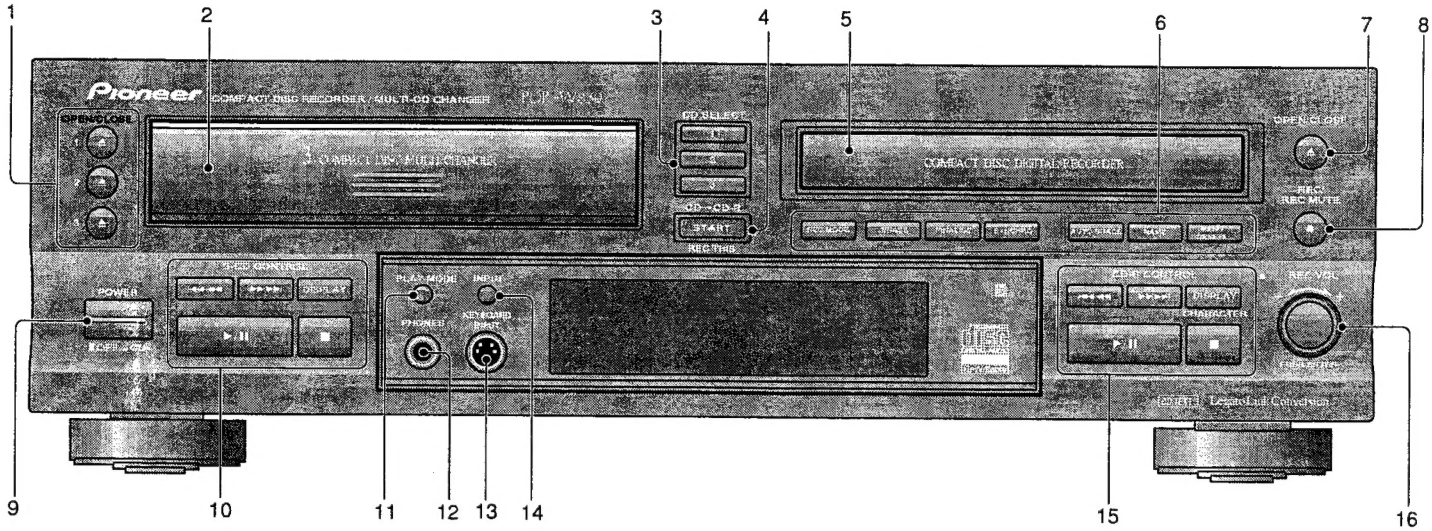

1 **OPEN/CLOSE ▲ 1/2/3** – Press to open/close disc tray 1, 2 or 3 from the changer.

2 **Changer disc tray**

3 **CD SELECT 1/2/3** – Press to select and play disc 1, 2 or 3 from the changer.

4 **CD → CD-R START(REC THIS)**– Press to start copying from disc(s)/tracks in the CD changer.

5 **CD-R disc tray**

6 **CD-R functions**
REC MODE – Use to select the copy mode: disc, track or program.
ERASE – Use to select the erase mode: last track, multiple tracks, all tracks or TOC.
FINALIZE – Press to start finalizing a disc.
SYNCHRO – Use to select the synchro recording mode when recording from an external component.
AUTO SPACE – Press to switch on/off automatic track spacing when copying a programmed playlist.
NAME – Use to cycle through CD text naming options.
MENU/DELETE – Press to cycle through the preference menu options.Press to delete characters while editing CD text.

7 **OPEN/CLOSE ▲** – Press to open/close the CD-R disc tray.

8 **REC / REC MUTE ●** – Press to put the recorder into record-pause mode ready for recording. Once recording, use to record blank sections onto a disc.

9 **POWER □OFF / ⎍ON** – Press to switch the unit on or off.

10 **3-CD Controls**
I◄◄ ◄◄ – Press for reverse track skip; press and hold for fast reverse playback.
►► ►►I – Press for forward track skip; press and hold for fast forward playback.
DISPLAY – Use to switch the CD display mode.
►/II – Press to play a disc or pause a disc that's already playing (press again to restart playback).
■ – Press to stop playback.

11 **PLAY MODE** – Set the play mode to play one disc,all discs in the changer ,or all discs in both the changer and CD-R.

12 **PHONES** – Plug in a pair of headphones.

13 **KEYBOARD INPUT** – Connect a keyboard to input CD text.

14 **INPUT** – Use to select the external input to use: optical, coaxial or analog line in.

15 **CD-R CONTROL**
I◄◄ ◄◄ – Press for reverse track skip; press and hold for fast reverse playback.
►► ►►I – Press for forward track skip; press and hold for fast forward playback.
DISPLAY – Use to switch the CD-R display mode.
►/II – Press to play a disc or pause a disc that's already playing (press again to restart playback). Also use when recording to start or pause recording.
■ – Press to stop playback or recording.

15 ○ **REC LEVEL** (Jog dial)– Turn to adjust the recording level.Push to switch between fixed and variable level recording in digital recording mode. Also turn to select options in the menu ;cycle through characters in CDtext ;skip tracks while stopped or during playback. Push the jog dial to select characters in CD text ;confirm menu settings ;play a disc (when stopped).

■ Remote Control Unit

1 **DISPLAY/CHARA** – Press to switch between display modes, and between upper-and lower-case characters while using CD text.

2 **SCROLL** – Press to scroll through long names in CD text.

3 **MENU/DELETE** – Press to access the preference menu options. Press to delete characters while edting CD text.

4 **FADER** – Press to fade in or fade out during playback or recording.

5 **PLAY MODE** – Set the play mode to play one disc,all discs in the 3-CD changer ,or all discs in both the changer and CD-R.

6 **10/0MARK** – Use in selecting tracks over ten ,as well as for choosing symbols when using CD text.

7 **Playback control buttons**
⏮ ⏭ – Skip back/forward tracks.
► – Start or resume playback, or start recording from record-pause mode.
◄◄ ►► – Press and hold for fast-reverse and fast-forward playback ,and to move cursor position when using CD text.
ENTER – Confirm menu settings ;confirm characters in CD text.
■ – Stop playback or recording.

8 **REC THIS** – Press to record the track that's currently playing the changer.

9 **Disc select buttons**
DISC1/2/3 – Press to select and play disc 1,2 or 3 from the changer.
CD-R – Switch to the CD recorder and play the currently loaded CD/CD-R/CD-RW.

10 **Playback/skip buttons**
PROGRAM – Program the playback track order.
CHECK – Check the tracks of a programmed play list ,and monitor the CD changer.
CLEAR – Clear the last programmed track in program play mode.
RANDOM – Start random track/disc playback.
REPEAT – Set the repeat mode.
SKIPPLAY – Press to switch skip play on or of.
SKIP ID SET/CLEAR – Set or clear a track skip ID for the current track.

11 **NAME CLIP** – Press to copy the current CD text to the recorder's memory.

12 **Number/Letter buttons** – Use to jump directly to track numbers for playback ,selecting track number for editing/ programming ,and selecting letters when using CD text.

13 **NAME** – Use to cycle through the CD text naming options.

14 **>10** – Use to select track numbers over 10.

15 **II** – Pause playback or recording.

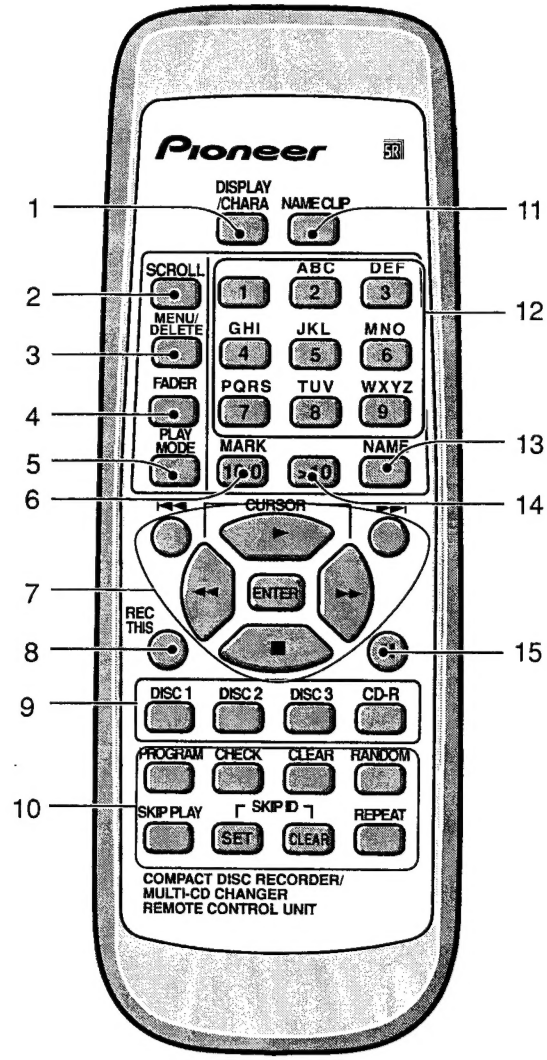

■ Display

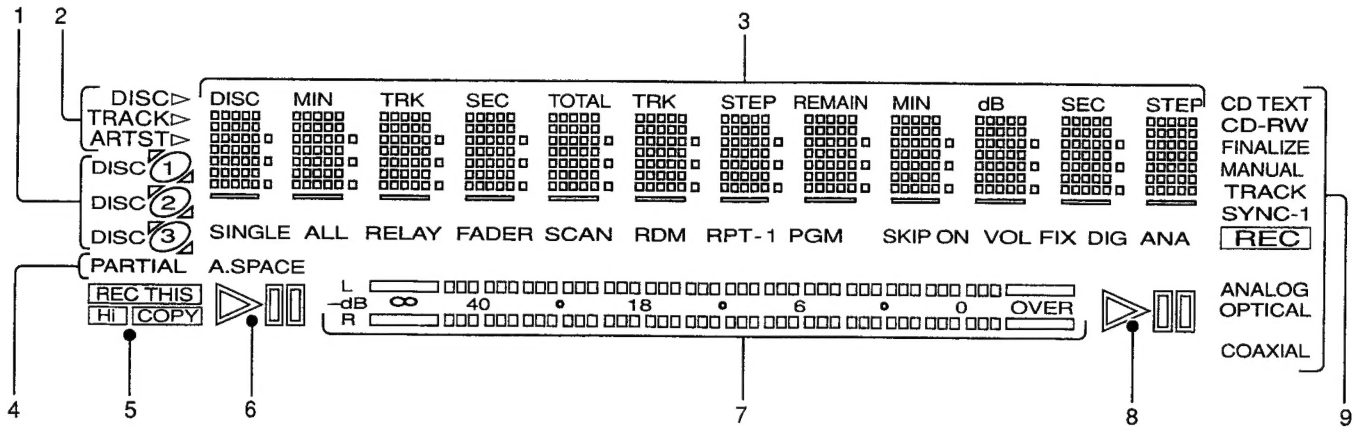

1 **DISC 1/2/3** – Indicates discs loaded.

2 **DISC Lights** when disc information is displayed.
TRACK Lights when track information is displayed.
ARTST Lights when artist information is displayed.

3 **Message/time display**

4 **Status indicators**
PARTIAL – Lights when a partially recorded CD-R or CD-RW is loaded into the 3 CD changer. Random and repeat play functions are not available when this is lit.
A. SPACE – Lights when automatic track spacing is on in program copy mode.
SINGLE / ALL / RELAY – Indicates the play mode.
FADER – Lights during fade in or fade out.
SCAN – Blinks while checking playback from the CD changer(after CHECK is pressed).
RDM – Lights in random-play mode.
RPT / RPT-1 – Lights when disc repeat / track repeat is on.
PGM – Lights in program-play mode.
SKIP ON – Lights to indicate that a track's skip ID is set. SKIP blinks when clearing or setting a skip ID (ON does not appear).
VOL – Lights when the digital volume level is set to something other than 0dB.
FIX – Lights when fixed recording level is on.
DIG / ANA – Indicates whether internal recording is via a digital or analog link.

5 **REC THIS/Hi/COPY** – Lights when during CD recording and indicates high-speed copying.

6 ▷ – Lights when a disc in the changer is playing or paused.
▯▯ – Lights when a disc in the changer is paused.

7 **Level meter**

8 ▷ – Lights when the recorder is playing, paused or recording.
▯▯ – Lights when the recorder is paused.

9 **CD-R function indicators**
CD TEXT – Lights the current CD contains CD text.
CD / CD-R / CD-RW – Indicates the type of disc currently loaded in the recorder.
FINALIZE – Blinks during auto-finalization recording; lights if a finalized CD-RW disc is loaded.
MANUAL – Indicates manual numbering.
TRACK – Blinks during recording or monitoring when a new track will start using auto track numbering.
SYNC/SYNC-1 – Lights up when the recorder is in automatic synchro recording.
REC – Lights when in record or record-pause mode.
Blinks during record-muting
ANALOG/OPTICAL/COAXIAL – Lights when the corresponding analog or digital input is selected.

8.2 SPECIFICATIONS

1. General

Model ..... Compact disc audio system
Applicable discs ..... CDs, CD-Rs and CD-RWs
Power supply ..... AC 120 V, 60 Hz
(U.S./Canadian models)
AC 220-240 V, 50/60 Hz (U.K./European model)
Power consumption ..... 17 W (U.S./Canadian models)
17 W (U.K./European model)
Operating temperature ..... +5 °C to +35 °C
(+41 °F to +95 °F)
Weight (without package) ..... 5.7 kg
Max. dimensions ..... 420 (W) x 128 (H) x 380 (D) mm

2. Audio unit

Frequency characteristics ..... 2 Hz to 20 kHz
Playback S/N ..... 110 dB (EIAJ) (U.S./Canadian models)
112 dB (EIAJ) (UK/European model)
Playback dynamic range ..... 98 dB (EIAJ)
Playback total harmonic distortion ..... 0.002 % (EIAJ)
(U.S./Canadian models)
0.0017 % (EIAJ) (UK/European model)
Playback channel separation ..... 98 dB (EIAJ)
Recording S/N ..... 92 dB (EIAJ)
Recording dynamic range ..... 92 dB (EIAJ)
Recording total harmonic distortion ..... 0.004 %
Output voltage ..... 2.0 V
Wow-flutter ..... Less than measurement limit
((±0.001 % W.PEAK) (EIAJ))
Number of channels ..... 2 channels (stereo)
Coaxial output ..... 0.5 Vpp ±20 % (75 Ω)
Optical output . –15 to –21 dBm (wavelength: 660 nm)
Frequency deflection: Level 2 (standard mode)
*Recording specification values are for the LINE input (analog)

3. Input jacks

Optical digital input jack
Coaxial digital input jack
Audio LINE input jacks
Control IN jack

4. Output jacks

Optical digital output jack
Coaxial digital output jack
Audio LINE output jack

5. Accessories

Remote control unit 1
Size AA/R6P dry cell batteries 2
Stereo audio cord 2
AC power cord 1
Operating instructions 1
Warranty card 1
Keypad stickers (for European model) 1

NOTE:
The specifications and design of this product are subject to change without notice, due to improvements.

■ Accessories

Two Sets of Audio Cords
(RDE1036)(L = 1 m)

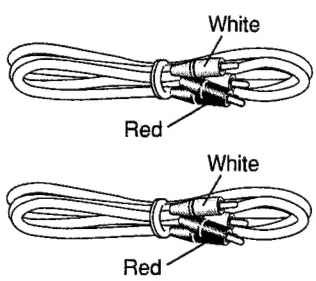

AC Power Cord (KUXJ/CA Type)
(ADG7022)

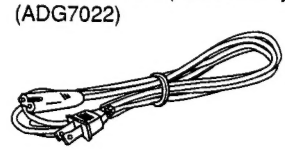

AC Power Cord (WVXJ Type)
(ADG1156)

AC Power Cord (WYXJ Type)
(ADG1154)

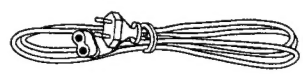

Two "AA" size R6P Batteries
(VEM-013)

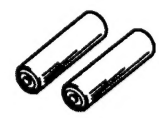
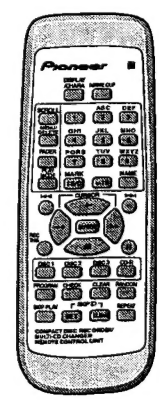
Remote Control Unit
(PWW1171)